Durham University

Durham Research Online

Deposited in DRO:

30 November 2017

Version of attached file:

Accepted Version

Peer-review status of attached file:

Peer-reviewed

Citation for published item:

Liu, J. and Moore, S. and Chen, C. and Lindsey, K. (2017) 'Crosstalk complexities between auxin, cytokinin and ethylene in Arabidopsis root development : from experiments to systems modelling, and back again.', Molecular plant., 10 (12). pp. 1480-1496.

Further information on publisher's website:

https://doi.org/10.1016/j.molp.2017.11.002

Publisher's copyright statement:

© 2017 This manuscript version is made available under the CC-BY-NC-ND 4.0 license
http://creativecommons.org/licenses/by-nc-nd/4.0/

Use policy

The full-text may be used and/or reproduced, and given to third parties in any format or medium, without prior permission or charge, for personal research or study, educational, or not-for-profit purposes provided that:

- a full bibliographic reference is made to the original source
- a link is made to the metadata record in DRO
- the full-text is not changed in any way

The full-text must not be sold in any format or medium without the formal permission of the copyright holders.

Please consult the full DRO policy for further details.

Durham University Library, Stockton Road, Durham DH1 3LY, United Kingdom
Tel : +44 (0)191 334 3042 | Fax : +44 (0)191 334 2971
https://dro.dur.ac.uk

Accepted Manuscript

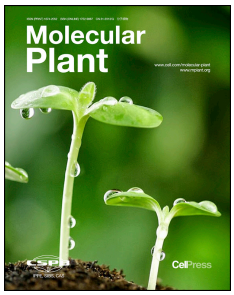

Crosstalk complexities between auxin, cytokinin and ethylene in *Arabidopsis* root development: from experiments to systems modelling, and back again

Junli Liu, Simon Moore, Chunli Chen, Keith Lindsey

PII: S1674-2052(17)30335-0
DOI: 10.1016/j.molp.2017.11.002
Reference: MOLP 544

To appear in: *MOLECULAR PLANT*
Accepted Date: 7 November 2017

Please cite this article as: **Liu J., Moore S., Chen C., and Lindsey K.** (2017). Crosstalk complexities between auxin, cytokinin and ethylene in *Arabidopsis* root development: from experiments to systems modelling, and back again. Mol. Plant. doi: 10.1016/j.molp.2017.11.002.

This is a PDF file of an unedited manuscript that has been accepted for publication. As a service to our customers we are providing this early version of the manuscript. The manuscript will undergo copyediting, typesetting, and review of the resulting proof before it is published in its final form. Please note that during the production process errors may be discovered which could affect the content, and all legal disclaimers that apply to the journal pertain.

All studies published in MOLECULAR PLANT are embargoed until 3PM ET of the day they are published as corrected proofs on-line. Studies cannot be publicized as accepted manuscripts or uncorrected proofs.

ACCEPTED MANUSCRIPT

Crosstalk complexities between auxin, cytokinin and ethylene in *Arabidopsis* root development: from experiments to systems modelling, and back again

Junli Liu[1, 3,] Simon Moore[1, 3,] Chunli Chen[2, 4], and Keith Lindsey[1, 4]

[1]Department of Biosciences, Durham University, South Road, Durham DH1 3LE, UK

[2] College of Life Science and Technology, Huazhong Agricultural University, Wuhan, 430070, China

[3]Joint first authors: both authors contributed equally to this work.

[4]Joint corresponding authors

Authors for correspondence:

Keith Lindsey (keith.lindsey@durham.ac.uk, tel: +44 191 334 1309; fax: +44 191 334 1201)
Chunli Chen (chenchunli@mail.hzau.edu.cn, tel: +86 27 8728 2101; fax: +86 27 8728 2469)

Running title: Hormonal crosstalk in the Arabidopsis root

Short Summary

Understanding how hormones and genes interact to coordinate plant is a major challenge in plant developmental biology. Integrating a variety of experimental data into a crosstalk network reveals multiple layers of complexity in auxin, cytokinin and ethylene crosstalk. A novel methodology that iteratively combines experiments with systems modelling analysis is essential for elucidating this complexity in root development.

ACCEPTED MANUSCRIPT

ABSTRACT

Understanding how hormones and genes interact to coordinate plant growth in a changing environment is a major challenge in plant developmental biology. Auxin, cytokinin and ethylene are three important hormones that regulate many aspects of plant development. This review critically evaluates the crosstalk between the three hormones in Arabidopsis root development. We integrate a variety of experimental data into a crosstalk network, which reveals multiple layers of complexity in auxin, cytokinin and ethylene crosstalk. In particular, data integration reveals an additional, largely overlooked link between the ethylene and cytokinin pathways, which acts through a phosphorelay mechanism. This proposed link addresses outstanding questions on whether ethylene application promotes or inhibits receptor kinase activity of the ethylene receptors. Elucidating the complexity in auxin, cytokinin and ethylene crosstalk requires a combined experimental and systems modelling approach. We evaluate important modelling efforts for establishing how crosstalk between auxin, cytokinin and ethylene regulates patterning in root development. We discuss how a novel methodology that iteratively combines experiments with systems modelling analysis is essential for elucidating the complexity in crosstalk of auxin, cytokinin and ethylene in root development. Finally, we discuss the future challenges from a combined experimental and modelling perspective.

KEYWORDS

Arabidopsis, auxin, cytokinin, ethylene, hormonal crosstalk, spatiotemporal modelling, systems biology, root.

ACCEPTED MANUSCRIPT

INTRODUCTION

Plants are sessile organisms and therefore they must adapt their growth and architecture to a changing environment. Hormone signalling systems coordinate plant growth and development through a range of complex interactions. The original 'classical' plant hormones are ethylene, cytokinin, auxin, abscisic acid and gibberellins; more recently identified hormones include brassinosteroids, strigolactones, salicylic acid, nitric oxide and jasmonic acid (Santner and Estelle, 2009). Hormone activities in cells are a function of multiple factors such as hormone biosynthesis, degradation and conjugation, long and short range transport, as well as hormone activation and inactivation (Del Bianco et al., 2013; Ludwig-Muller 2011; Weyers and Paeterson, 2001). Hormones and the associated regulatory and target genes form a network in which relevant genes regulate hormone activities and hormones regulate gene expression (Bargmann et al., 2013; Chandler, 2009; Depuydt and Hardke, 2011; Vanstraelen and Benkova, 2012). Therefore the activities of these hormones depend on cellular context and exhibit either synergistic or antagonistic interactions (Garay-Arroyo et al., 2012). This interaction means the activity of each hormone cannot change independently of the various crosstalk components in space and time. Important questions for understanding hormonal crosstalk in root development therefore include how hormone concentrations and expression of the associate regulatory and target genes are mutually related; and how patterning of both hormones and gene expression emerges under the action of hormonal crosstalk.

The most common form of biologically active auxin is indole-3-acetic acid (IAA), although other compounds similar to IAA, such as indole-3-butyric acid (IBA), phenylacetic acid, and 4-chloroindole-3-acetic acid (4-Cl-IAA) (Tivendale and Cohen, 2015) are also auxins. Cytokinins are N^6 substituted adenine derivatives (Kieber and Schaller, 2014). Ethylene is a simple gaseous hydrocarbon (C_2H_4) (Schaller and Kieber, 2002). These three hormones regulate many aspects of plant development (Kieber and Schaller, 2014; Paque and Weijers, 2016; Schaller and Kieber, 2002). Importantly, the three hormones form complex regulatory networks at the levels of gene expression, signalling transduction, and metabolic conversions (Liu et al., 2014).

This review focuses on a critical analysis of crosstalk between auxin, cytokinin and ethylene in root development. We integrate a variety of experimental data to reveal multiple layers of complexity in auxin, cytokinin and ethylene crosstalk in Arabidopsis root development. Elucidating the complexity in auxin, cytokinin and ethylene crosstalk requires a combined

approach, involving both experimental measurement and systems modelling. We evaluate important modelling efforts to establish how crosstalk between auxin, cytokinin and ethylene regulates patterning in root development; we discuss how an iterative methodology, from experiments to system modelling and back again, is essential for understanding the complexity of hormonal crosstalk in root development; and finally, we discuss the future challenges from a combined experimental and modelling perspective.

INTEGRATION OF EXPERIMENTAL DATA REVEALS MULTIPLE LAYERS OF COMPLEXITY IN AUXIN, CYTOKININ AND ETHYLENE CROSSTALK IN ARABIDOPSIS ROOT DEVELOPMENT

Crosstalk between hormone signalling and gene expression in root development can be extremely complex. Signalling pathways are not simple independent linear pathways, but can display redundancy, functional overlap, and multiple feedback loops combined with direct and indirect regulation amongst different pathways. Due to this complexity, it is extremely difficult to understand fully the outcome of a specific hormone signal, since it inevitably affects multiple pathways, which directly or indirectly regulate each other.

Experimental data accumulated over many years can be used to construct a network of crosstalk between auxin, cytokinin and ethylene in Arabidopsis root development, as illustrated in Figure 1. The crosstalk network, while inevitably incomplete, provides a foundation for analysing the interactions between these hormones in root development. Each link or 'reaction' in the network is established based on experimental results, as summarised in Table S1. As shown in Figure 1, there are multiple direct and indirect links between the signalling pathways of the three hormones. Crosstalk between the three hormones occurs at all levels including metabolism, signalling and gene expression. Importantly, integration of various experimental data into a crosstalk network, as in Figure 1, reveals multiple layers of complexity. Elucidating this complexity is essential for understanding how auxin, cytokinin and ethylene coordinate to regulate root development.

---Figure 1 here---

The hormonal crosstalk network, Figure 1, is a multi-level type of network, consisting of gene expression, signal transduction and metabolic conversions. Building such a network requires the integration of biological knowledge at all of these three levels (Liu et al., 2014). Importantly, from the viewpoint of the hormonal crosstalk network in Figure 1, root development is regulated by the integrated action of auxin, cytokinin and ethylene signalling.

Changing any single component of the hormonal crosstalk network in Figure1, potentially changes all other components in the network. Thus, the role of one hormone such as auxin in regulating root development requires examination in the context of other hormones such as cytokinin and ethylene. In this sense, all aspects of the three hormones (auxin, ethylene and cytokinin) should be discussed in order to comprehensively review crosstalk between auxin, cytokinin and ethylene in root development. However, this is clearly not feasible for a single review article.

Due to the importance of the three hormones in regulating plant development, many aspects of these hormones have already been reviewed. Previous reviews have covered different topics such as metabolism of auxin (Hurny and Benkova, 2017; Li et al., 2016; Ljung, 2013; Zhao, 2010; 2014); cytokinin (Hurny and Benkova, 2017; Hirose et al., 2008; Kieber and Schaller, 2014; Zürcher and Müller, 2016); and ethylene (Larsen, 2015; Schaller and Kieber, 2002); as well as signalling and/or metabolic interplay between auxin, cytokinin and ethylene (Jones and Ljung, 2011; Ljung, 2013; Su et al., 2011; Schaller et al., 2015; Chandler and Werr, 2015; Van de Poel et al., 2015). We suggest that readers consult these reviews for information on each specific topic.

In the following sections, we attempt to highlight the complexities of hormone signalling pathways and crosstalk between auxin, cytokinin and ethylene. By doing so, we highlight both the numerous layers of complexity in auxin, cytokinin and ethylene crosstalk and, as a result, the necessity of a systems approach for elucidating the role of these hormones in root development.

Pathway complexities involving receptor clusters and higher level complexes, multiple pathways and regulatory feedback loops

In the ethylene signalling pathway of Arabidopsis, there are 5 receptors (ETR1, ETR2, ERS1, ERS2, EIN4 in 2 subfamilies), which predominantly reside at the endoplasmic reticulum (ER) membrane, with differing but overlapping and partially redundant functions, acting by phosphorelays and/or conformational change through dimerization and higher level component clusters. There are two recognised pathways. The first is the classical and dominant CTR1-dependent pathway (links 1,5,6,8,9,13 and 14 in Table S1) where, in the presence of ethylene, the receptors are inactivated, which in turn inactivates CTR1 and releases the CTR1 suppression of downstream ethylene signalling. The second is a weaker CTR1-independent pathway which by-passes CTR1 (links 1, 7, 8, 9, 13 and 14 in Table S1).

The two pathways are thought to converge at EIN2 (links 6, 7 in Table S1). In the presence of ethylene, both pathways act in the same direction to promote the ethylene response.

Common to both pathways are several regulatory feedback loops. For example, in the presence of ethylene, EIN3 accumulates and promotes *EBF2* (link 12 in Table S1), which is an inhibitor of ethylene signalling (link 9 in Table S1). Downstream ethylene signalling both positively and negatively regulates levels of the ETR2 receptor (links 17, 18 in Table S1); and ethylene signalling both positively and negatively regulates the activity of ETR1 through expression of the ETR1 receptor activators RTE1 and PLS, which are upregulated (link 19 in Table S1) and inhibited (link 20 in Table S1) by ethylene respectively. Indirect feedback loops also exist. For example, ethylene signalling regulates auxin biosynthesis (link 15 in Table S1) and auxin transport (link 16 in Table S1), which affects auxin concentrations, patterning and signalling and in turn, ethylene and cytokinin metabolism and signalling pathways.

Similar to the ethylene signalling pathway, both auxin and cytokinin pathways also display complex relationships involving metabolism, signalling and gene expression. Another layer of crosstalk complexity is that expression of many genes is regulated by more than one hormone, as revealed by integrating the experimental data (Figure 1 and Table S1).

Both ethylene and cytokinin regulate the ARR5 cytokinin reporter

The *Arabidopsis ARR5* gene, commonly used in cytokinin reporter constructs (Werner et al., 2003; Zurcher et al., 2013) but regulated by both cytokinin and ethylene signalling, provides an example of crosstalk between different hormonal pathways. The application of cytokinin initiates the phosphorelay function of the cytokinin receptors, which in turn phosphorylates and activates the Type-B *Arabidopsis* transcriptional response regulators (ARRs) (links 30, 31, 33 in Table S1). The Type-B ARRs then upregulate the Type-A ARRs (link 38 in Table S1), which are not transcription factors but inhibit Type-B activity (link 39 in Table S1). Therefore *ARR5* (a Type-A ARR) is upregulated in the presence of cytokinin due to the action of the links 30, 31, 33 and 38 in Table S1.

In the presence of ethylene, both the CTR1-dependent and CTR1 independent ethylene pathways upregulate the activity of EIN3, which is regarded as a key transcription factor promoting ethylene signalling. However, EIN3 also negatively regulates the Type-A *Arabidopsis* response regulators *ARR5, 7, 15* (link 11 in Table S1), which are components in

the cytokinin pathway. Therefore, all ARR5-driven cytokinin response reporters reflect a combination of both cytokinin and ethylene activity. In addition, since Type-A ARRs are negative regulators of Type-B ARR activity (link 39 in Table S1), downstream ethylene signalling can also positively regulate the cytokinin pathway, in turn affecting *ARR5* expression. We note that link 11 in Figure 1 was established based on experimental data from both rosette leaves and whole seedlings but not specifically from roots; however EIN3 was shown to bind the *ARR5* promoter and the addition of ethylene downregulated *ARR5* expression in seedlings. Additional experiments are required to verify this link in roots and how it could potentially regulate root development.

Figure 1 and Table S1 also reveal additional crosstalk links between auxin, cytokinin and ethylene. The example detailed below demonstrates that integrating the experimental data suggests the existence of an additional third ethylene signalling pathway.

Components in the cytokinin pathway form part of a third ethylene signalling pathway which acts in the opposite direction to the CTR1-dependent and -independent ethylene pathways

Figure 1 and Table S1 reveal an additional link between the ethylene and cytokinin pathways, which has been largely overlooked, through a proposed phosphorelay interaction (Shakeel et al., 2013; Mason and Schaller, 2005).

In the absence of ethylene, this pathway is initiated by the histidine kinase activity of the subfamily 1 ethylene receptors ETR1 and ERS1 (link 21 in Table S1), which phosphorylates and activates ARR2 in the cytokinin pathway (link 22 in Table S1), resulting in the upregulation of *ERF1* in the ethylene pathway (link 25 in Table S1) to positively regulate ethylene signalling (link 14 in Table S1).

There are numerous experimental results indicating that such a pathway could exist. As early as 1995, an ‘ethylene-independent’ pathway was suggested, since cytokinin application produced a partial ethylene response in seedlings treated with the ethylene biosynthesis inhibitor AVG (Cary et al., 1995). Further evidence from later experiments show that, in the absence of ethylene, ERS1 can promote ethylene signalling (and growth inhibition) dependent on ETR1, since the addition of the *ers1* null mutant to any ethylene receptor mutant background, not containing *ERS1* wildtype (WT) or mutant but containing WT ETR1, partially reversed the mutant phenotype and growth inhibition (Liu et al., 2010a). It was also demonstrated that ERS1 could act as both a positive and negative regulator of ethylene

signalling and response (Liu et al., 2010a). Deletion of the histidine kinase activities of the subfamily 1 receptors ETR1 and ERS1 was also shown to reduce ethylene-response sensitivity compared to WT (Hall et al., 2012), again indicating that the subfamily 1 receptors can act to promote ethylene signalling. Investigation of phospho-transfer interactions between the ethylene receptor ETR1 and ARR2 in the cytokinin pathway, and of the relationship between ARR2 and *ERF1* where ARR2 was shown to upregulate *ERF1* in the ethylene pathway, provided additional information on the likely components and interactions involved in this proposed pathway (Hass et al., 2004). Although these experimental data demonstrate the link between ETR1 and ARR2 and suggest a potential link between active ARR2 and ethylene signalling, whether or not this link influences a specific developmental process should be carefully considered. Further experiments are required to explore how this link potentially regulates root development.

Integration of experimental data into a crosstalk network (Figure 1) therefore suggests the existence of a third ethylene signalling pathway that acts in the opposite direction to the other two pathways, where, in the absence of ethylene, it promotes ethylene signalling in contrast to the CTR1-dependent and -independent pathways which suppress ethylene signalling. As demonstrated in Figure 1, the CTR1-dependent and -independent pathways meet at EIN2 and then continue through ERF1 where they merge with the 3rd ethylene pathway which links to ERF1 via ARR2 from the cytokinin pathway.

The third ethylene pathway, involving components of the cytokinin pathway, resolves outstanding questions on whether ethylene application promotes or inhibits receptor kinase activity of the ethylene receptors

Whether ethylene application acts to promote or inhibit the kinase activity of the ethylene receptors remains unresolved (Merchante et al., 2013). *In vivo* studies have shown that ethylene inhibits kinase activity in tomatoes (Kamiyoshihara et al., 2012); other results found that ethylene suppresses the auto-phosphorylation activity of bacterially expressed ETR1 (Voet-van-Vormizeele and Groth, 2008); and similar results were also found using purified ETR1 (Bisson and Groth, 2010). Nevertheless, these contrast to observations where kinase inactive etr1 protein was expressed in subfamily 1 double null mutant background seedlings, *etr1-9 ers1-3*. Since active ethylene receptors (in the absence of ethylene) are thought to negatively regulate ethylene signalling, the expected result was that the mutants with inactive (or partially inactive) receptors would show an increased response to ethylene compared to

WT. However, the kinase inactive etr1 expressed in the double null *etr1-9; ers1-3* showed a significant decrease in ethylene dose response compared to WT (Hall et al., 2012). Moreover, the expression levels of ethylene-induced genes were lower in the kinase inactive *etr1* line compared to the WT (Hall et al., 2012). These latter results appear contradictory to the earlier findings which indicate that ethylene inhibits receptor activity. Since subfamily 1 receptors are the only receptors to have histidine kinase activity, two possible reasons were proposed: first that ethylene promotes (not inhibits) the histidine kinase activity of ETR1; or second, the existence of an additional CTR1-independent ethylene pathway involving histidine kinase activity and a phosphotransfer relay (Hall et al., 2012).

The question of whether ethylene promotes or inhibits histidine kinase activity of the subfamily 1 receptors arose due to the results from Hall et al. (2012) combined with the assumption that ethylene application always promotes ethylene signalling. Since the third pathway acts in a different direction to the other two pathways and inhibits ethylene signalling in the presence of ethylene, it removes the assumption that ethylene must always induce ethylene signalling. This resolves the outstanding question since the assumption that ethylene inhibits kinase and receptor activity is now consistent with all available experimental results.

This example also demonstrates how experimental data from multiple signalling pathways can be combined to address apparently contradictory results that arise when a single hormone signalling pathway is analysed in isolation and without considering regulatory cross-links to other pathways.

Cytokinin concentration and signalling is regulated by the kinase activity of the ethylene receptors

As shown in Figure 1, the kinase activity of the subfamily 1 ethylene receptors initiates a phosphorelay cascade that phosphorylates and activates ARR2 (links 21, 22 in Table S1). Since ARR2 upregulates cytokinin oxidase (link 43 in Table S1), decreases in ETR1 and ERS1 receptor activity should reduce the activity of cytokinin oxidase and result in increased cytokinin concentration. We note that, although this regulatory relationship is based on experimental observations (Hass et al., 2004), whether or not such a regulation occurs during root development requires further study. PLS is a promoter of ETR1 receptor activity (Casson et al. 2002; Chilley et al. 2006) and therefore a reduction in PLS should result in a

decrease in ETR1 activity and an increase in cytokinin concentration. This is confirmed in experimental results for the *pls* null mutant where there was a 1.42 median fold change in cytokinin concentration compared to wildtype (Liu et al., 2010b).

The presence of multiple ARR2 binding motifs in the promoter regions of cytokinin-induced genes has led to the suggestion that ARR2 could act as a master regulator of cytokinin signalling responses (Hwang and Sheen, 2001). Therefore the histidine kinase activity of ETR1 and ERS1, which has been shown to regulate the phosphorylation state and activity of ARR2 (links 21, 22 in Table S1), potentially positively regulates general cytokinin signalling through ARR2. Ethylene signalling also inhibits ARR5 through EIN3 (link 11 in Table S1). Since ARR5 acts as an inhibitor of cytokinin signalling, the application of ethylene can both positively and negatively regulate cytokinin signalling by interactions between ethylene and cytokinin pathways, through ARR5 and ARR2 respectively.

The auxin and cytokinin pathways are cross-linked via SHY2

SHY2 acts in both the auxin and cytokinin pathways and therefore functions as a 2-way link between the two pathways. In the cytokinin pathway, activated transcription factors ARR1 and ARR12 (Type-B) upregulate *SHY2* (link 48 in Table S1). However, SHY2 inhibits activities of IPT enzymes to reduce cytokinin biosynthesis (links 66, 46 in Table S1), introducing a negative feedback loop where cytokinin signalling limits its own synthesis.

SHY2 also acts in the auxin pathway as an Aux/IAA auxin signalling repressor (link 64 in Table S1), and is degraded in the presence of auxin to remove the inhibition and release auxin signalling (link 61 in Table S1). In addition, SHY2 inhibits transcription of the auxin efflux carriers *PIN1, 3,* and *7* (link 67 in Table S1), so regulating auxin transport and distribution.

By acting in both pathways, SHY2 also functions as a link between the two pathways so that auxin signalling regulates cytokinin signalling and vice versa. For example, upregulation of *SHY2* by cytokinin will act to inhibit auxin signalling (links 48, 64, 65 in Table S1) while degradation of SHY2 by auxin increases cytokinin biosynthesis (links 61, 66, 46 in Table S1). SHY2 therefore plays a complex regulatory role in both the cytokinin and auxin signalling pathways.

Downstream auxin signalling also upregulates Type-A *ARR7* and *ARR15* (link 69 in Table S1). Type-A ARRs act as inhibitors of Type-B ARRs (link: 39), and therefore potentially downstream auxin signalling downregulates SHY2 activity (links 69, 39, 48 in Table S1), to further promote auxin signalling (links 64, 65 in Table S1).

Auxin signalling downregulates cytokinin signalling through AHP6

AHP6 introduces another regulatory link between the auxin and cytokinin pathways. Downstream auxin signalling promotes the transcription of *AHP6* (link 68 in Table S1) and so inhibits the phosphorelay transfer cascade and cytokinin signalling (links 36, 31 in Table S1). This, in turn, links back into the auxin pathway through SHY2 as described above.

Auxin self-regulates it's own transport and cytokinin biosynthesis through auxin response factors (ARFs)

Auxin response factors (ARFs) act via several different pathways to regulate auxin transport, directly and through the cytokinin signalling pathway, and to also regulate cytokinin biosynthesis. In addition to the canonical auxin signalling pathway (link 65 in Table S1), ARFs act by the direct regulation of PIN auxin transporters, by the indirect regulation of PIN transporters through cytokinin response factors (CRFs), and by the direct regulation of cytokinin biosynthesis genes, as follows. The auxin response factor ARF5/MP (MONOPTEROS) directly upregulates *PIN1,3,7* and ARF7 directly upregulates *PIN3* (link 78 in Table S1). ARF5/MP also upregulates the cytokinin response factor gene *CRF2* (link 77 in Table S1) which regulates *PIN1* and *PIN7* in conjunction with CRF3 and CRF6 (link 57 in Table S1). Furthermore, ARF7 has been shown to upregulate the cytokinin biosynthetic enzymes IPT5 and IPT7 (link 79 in Table S1).

Crosstalk regulates auxin transporters and hormone patterning

All of the ethylene, cytokinin and auxin signalling pathways have been shown to regulate auxin cellular influx and efflux carriers (links 16, 50, 51, 54, 75 and 76 in Table S1). The polar properties of the auxin efflux carriers establish the classical auxin patterning with the maximum auxin response occurring in the quiescent centre region of the root tip (Grieneisen et al., 2007). It is thought that auxin patterning is a key driver for patterning of the other hormones, which in turn also influence auxin patterning (Liu et al., 2014). The crosstalk

regulation of the auxin influx and efflux carriers by all three hormones therefore plays an important role in regulating hormone patterning, and subsequent gene expression and root development.

Complex regulatory loops modulate hormonal signalling

Examination of the network in Figure 1 reveals numerous examples of positive, negative and duplicate regulatory loops. Figure S1 highlights a simple example from within each of the three pathways. Figure S1a shows that ethylene promotes signalling by increasing the degradation of EBF1,2, the accumulation of EIN3/EIL1 and the upregulation of ERF1. Signalling is simultaneously inhibited by the upregulation of EBF2. Figure S1b shows that auxin promotes signalling through two pathways, through *AUX/IAA* and also through *SHY2*. Inhibition of PIN1, PIN3 and PIN7 by *SHY2*, in turn, affects auxin concentration or responses. Figure S1c shows that cytokinin signalling is self-regulated by the phosphorylation and activation of the Type-B ARRs (including ARR2) and the simultaneous upregulation of cytokinin degradation through ARR2 and CKX. Additional and far more complex regulatory loops can be identified when signalling between pathways is taken into consideration.

Therefore, depending on the relative balance of hormone patterning and the associated signal pathways, the outcome from a given hormone stimulus could vary depending on which regulatory factor dominates in a different area of the root or under a different set of conditions. Thus, the outcomes from the crosstalk of auxin, cytokinin and ethylene are essentially nonlinear and unintuitive.

TACKLING THE COMPLEXITY IN AUXIN, CYTOKININ AND ETHYLENE CROSSTALK IN ARABIDOPSIS ROOT DEVELOPMENT: A METHODOLOGY THAT ITERATIVELY COMBINES EXPERIMENTS AND SYSTEMS MODELLING

Figure 1 and Table S1 demonstrate that auxin, cytokinin and ethylene form a complex hormonal crosstalk network that regulates root development. A hormonal crosstalk network is a type of network that consists of gene expression, signal transduction and metabolic conversions (Liu et al., 2014). Therefore, analysing the action of such a network requires a model that integrates these different processes. Defining a hormonal crosstalk network model for root development needs careful consideration of several different factors (Moore et al., 2015a; 2015b); including the relationships between hormones and the associated genes;

formulation of kinetic equations following thermodynamic and kinetic principles; spatial root structure; transport kinetics for all hormonal crosstalk components; and parameterisation of a hormonal crosstalk model.

Modelling the individual gene expression, signal transduction and metabolic conversion processes in a hormonal crosstalk network necessitates the development of complex models. For example, modelling the regulation of gene expression requires a range of models from Boolean network to ordinary differential equation models (Karlebach and Shamir, 2008). Modelling signalling transduction needs to properly formulate kinetic equations following thermodynamic and kinetic principles (Klipp et al., 2009). Modelling metabolic conversions must examine how metabolic flux is controlled (Fell, 1997). It is therefore evident that modelling the action of a hormonal crosstalk network in a spatial root structure presents a very challenging task, as discussed below.

In principle, a possible way to reduce the complexity of modelling a hormonal crosstalk network in a spatial root structure is to model the action of one hormone at a time. Some important modelling efforts have concentrated on the analysis of auxin patterning.

Modelling auxin patterning

Auxin patterning in the Arabidopsis root is predominantly regulated by auxin transport proteins (Zazimalova et al., 2010), which include PIN-FORMED (PIN) proteins (PINs) (Adamowski and Friml, 2015), the AUX1/LIKE-AUX1 (AUX1/ LAX) family of influx carriers/channels (Swarup and Peret, 2012), and the ABCB transporters (Geisler and Murphy, 2006; Cho and Cho, 2012). How auxin transporters regulate auxin patterning is an important modelling topic.

Grieneisen et al. (2007; 2012) developed a model that simulates intercellular auxin flow through a generalised rectangular root system. The model includes auxin influx from the shoot to the root, local auxin biosynthesis and decay, influx across the plasma membrane from the cell walls into the cytosol mediated by ubiquitous AUX1 protein concentration levels, and auxin efflux from the cells into the cell walls mediated by polar PIN proteins. A generalised PIN protein is represented in the Grieneisen et al. (2007; 2012) model, which only includes PIN1, PIN2 and PIN3. Depending on the type of cell within the generalised rectangular root system, the model prescribes polar PIN concentration at the plasma

membrane. Based on model simulation results, a reflux-loop mechanism was proposed to explain how PINs establish and maintain the auxin gradient in the Arabidopsis root (Grieneisen et al., 2007; 2012). The core of the reflux-loop mechanism is that auxin is transported from the vasculature to the root tip and then PIN activity transports auxin laterally from the quiescent centre. The modelling analysis (Grieneisen et al., 2007; 2012) suggests that PIN transporters are sufficient to generate the auxin gradient and supports the hypothesis that auxin gradients are sink-driven (Friml et al., 2002).

Also using a generalised rectangular root system, Mironova et al. (2010) developed a model that only considers PIN1 protein localization. The model assumes that auxin promotes PIN1 biosynthesis at low concentration and PIN1 degradation at high concentration. Therefore, auxin is an activator of PIN1 protein at low concentration and an inhibitor of PIN1 protein at high concentration. Therefore, increasing auxin concentration to a threshold increases PIN1 protein concentration, while, once auxin concentration is increased over the threshold, increasing auxin concentration decreases PIN1 protein concentration. Based on the model simulation, a reflected-flow mechanism for the formation of the auxin maximum in the root apical meristem was proposed to explain how PIN1 establishes and maintains the auxin gradient in Arabidopsis root (Mironova et al., 2010). Although the reflux-loop mechanism (Grieneisen et al., 2007; 2012) and the reflected-flow mechanism (Mironova et al., 2010) consider different aspects of PIN proteins, both support the hypothesis that auxin gradients are sink-driven (Friml et al., 2002).

Although the models that consider that PIN protein function in transporting auxin (Grieneisen et al., 2007; 2012; Mironova et al., 2010) can establish auxin gradients in the Arabidopsis root, a simple analysis of the relationship between auxin influx and efflux suggests that AUX1 influx must be at least equal to PIN efflux to avoid auxin depletion in the cells (Kramer, 2004). Experimental measurements also show that a majority of auxin influx into protoplasts is mediated by the influx carrier AUX1 (75%) and other saturable carriers (20%) at pH 5.7 (Rutschow et al., 2014). This implies that AUX1 influx is also important for establishing auxin gradients. Band et al. (2014) developed a model to investigate the role of AUX1/LAX proteins in auxin gradients. A significant advance of this model is that intercellular auxin flow is simulated in actual root cell geometries, rather than a generalised rectangular root structure. By combining modelling analysis with experimental measurements, they found that AUX1 activity is also required to create the auxin gradient at

the root tip (Band et al., 2014). Specifically, the nonpolar AUX1/LAX proteins act to retain cellular auxin and control which tissues have high auxin levels, whereas the polar PIN proteins control the direction of auxin transport within these tissues (Band et al., 2014). Therefore, modelling analysis supports the view that both PIN proteins (Grieneisen et al., 2007; 2012; Mironova et al., 2010) and AUX1/LAX proteins (Band et al., 2014) are important in generating auxin patterning in Arabidopsis root.

The ABCB transporters (Geisler and Murphy, 2006; Cho and Cho, 2012) can reversibly redirect auxin flux. There is no model specifically analysing the role of the ABCB transporters in root development. However, a recent combined modelling and experimental study shows that the less-polar transport activities of ABCB proteins are also required to explain auxin patterning for the growing shoot tips of a plant (Bennett et al., 2016). Auxin patterning depends not only on the high-polar transport by PIN proteins, but also on the widespread less-polar transport activities of ABCB proteins. A new mechanism for auxin patterning, termed Connective Auxin Transport (CAT), has been formulated (Bennett et al., 2016).

In addition, modelling of auxin patterning has been applied to study various aspects of root development. For example, a combined experimental and modelling analysis suggested that synchronous bursts of cell death in lateral root cap cells release pulses of auxin to surrounding root tissues, establishing the pattern for lateral root formation (Xuan et al., 2016). A modelling analysis investigated how auxin asymmetry is generated during halotropism and modelling results were confirmed by experimental measurements (van den Berg et al., 2016).

These modelling efforts unsurprisingly suggest that PINs, AUX1/LAX, and ABCB proteins all play their roles in auxin patterning. However, to what extent each transporter class contributes to auxin patterning remains an important outstanding question. To address this question, the auxin permeability of each class of transport proteins needs to be experimentally measured. Modelling analysis needs to use the experimental data and integrate all transporters into an integrative system. A recent modelling effort has explicitly integrated PIN1, PIN2, PIN3, PIN4, PIN7, AUX1, LAX2, and LAX3, as well as including the activities of ABCB into the background activities of PINs and AUX1/LAX (Moore et al., 2017). By formulating a Recovery Principle, Moore et al. (2017) showed that auxin patterning is

potentially controlled by multiple combinations of interlinked levels and localisation of influx and efflux transporters. The corresponding relationship of influx and efflux levels and polarity, rather than the individual activities of influx or efflux transporters, controls the formation of an auxin pattern (Moore et al., 2017). Therefore, these recent conceptual developments, i.e., Connective Auxin Transport (CAT) (Bennett et al., 2016) and the Recovery Principle (Moore et al., 2017), should be able to further elucidate the role of each class of transporters (PINs, AUX1/LAX, and ABCB) in quantitatively controlling auxin patterning in root development in the future. In addition, since most PIN proteins have a polar cellular distribution and lead to directed auxin transport across only those plasma membranes where PIN proteins are localised (Blilou et al., 2005), the mechanisms of polar auxin transport could also be further explored by examining the established flux-based and concentration-based models (van Berkel et al., 2013; Stoma et al., 2008).

Modelling crosstalk between auxin and cytokinin

Sixty years ago, the importance of the interaction between auxin and cytokinin in root and shoot development and the maintenance of cell proliferation was shown through experiments on cultured tobacco callus (Skoog and Miller, 1957). A variety of experimental data support the interaction between auxin and cytokinin to regulate various aspects in patterning of root development (Schaller et al., 2015). In particular, the interaction between auxin and cytokinin plays a central role in regulating the size of the meristem and root growth (Dello Ioio et al., 2007; 2008; Ruzicka et al., 2009). Figure 1 and Table S1 illustrate the complexity of these interactions between auxin and cytokinin.

Muraro et al. (2011) developed models that consider the crosstalk between auxin and cytokinin in a single cell, and in generalised one-dimensional or two-dimensional root structures (Muraro et al., 2013; 2016). They used the models to study how cytokinin affects auxin-regulated gene expression and how tissue-specific oscillations in gene expression can be generated by the interaction between auxin and cytokinin (Muraro et al., 2011; 2013). In a recent model, they extended the interaction between auxin and cytokinin to include gibberellin (Muraro et al., 2016). The model simulation predicted that some unknown components are required for regulating meristem size, and they experimentally searched for candidates for these components.

In addition, modelling of auxin and cytokinin crosstalk has also been used to elucidate root vascular patterning. Muraro et al. (2014) constructed a cross-sectional multicellular root geometry to study how a gene regulatory network, regulated by both auxin and cytokinin, can establish and maintain vascular patterning. De Rybel et al. (2014) studied how the interaction between auxin and cytokinin regulates vascular patterning during embryogenesis. el-Showk et al. (2015) developed a parsimonious model of vascular patterning to link transverse auxin fluxes to lateral root initiation. These three models all included PIN functionality and crosstalk between auxin and cytokinin, to demonstrate the importance of the interaction between auxin and cytokinin in elucidating root vascular patterning. Mellor et al. (2017) further analysed these models and highlighted that a consensus on whether or not there is a meaningful gradient of cytokinin in the root cannot be established by the three models.

The measurement of cytokinin levels in the root tip detected an intracellular gradient of cytokinin in the apical part of the primary root, with maximum concentrations in the lateral root cap, columella, columella initials, and quiescent centre cells (Antoniadi et al., 2015). However, the modelling results for the gradient of cytokinin in the root (Mellor et al., 2017) were not compared to these experimental measurements. Since an intracellular gradient of cytokinin does exist in the root (Antoniadi et al., 2015), future modelling analysis should explore how this gradient is established in the root and how the interaction between auxin and cytokinin regulates this gradient.

Modelling crosstalk between auxin, cytokinin and ethylene

The crosstalk between auxin, cytokinin and ethylene in root development includes the interplay of different layers of complexity in gene expression, signal transduction and metabolic conversions (Figure 1, Table S1). The first step in developing a model for crosstalk between auxin, cytokinin and ethylene is to extract key information from a range of experimental data.

A hormonal interaction network for a single Arabidopsis cell in the root was developed by iteratively combining modelling with experimental analysis (Liu et al., 2010b; 2013). It was described how such a network regulates auxin concentration in the Arabidopsis root by controlling the relative contribution of auxin influx, biosynthesis and efflux, and by integrating auxin, ethylene and cytokinin signalling as well as PIN and POLARIS (PLS)

peptide function. The *PLS* gene of Arabidopsis transcribes a short mRNA encoding a 36-amino-acid peptide that is required for correct root growth and vascular development (Casson et al., 2002). A model that integrates the action of auxin, ethylene, cytokinin, PINs and the *PLS* gene reveals that the interaction between PLS and PINs are important for the crosstalk between auxin, ethylene and cytokinin (Liu et al., 2013). Since this is a single cell model, essentially it can only study the average action of all cells in the root and is unable to examine the spatial patterning of any hormone.

Subsequently, a model was developed to study the patterning of auxin, cytokinin and ethylene, *PIN1* and *PIN2* expression, as well as *PLS* expression through a generalised rectangular root structure (Moore et al., 2015c). The model reproduces auxin patterning and trends in wild-type, *pls* mutant, *etr1* mutant, and *pls* and *etr1* double mutants. It reveals that coordinated PIN and AUX1 activities are required to generate correct auxin patterning; and it also correctly predicts shoot to root auxin flux, auxin patterning in the *aux1* mutant, the amounts of cytokinin, ethylene and PIN protein, and PIN protein patterning in wild-type and mutant roots. Importantly, the modelling analysis further reveals how PIN protein patterning is related to the PLS protein through ethylene signalling (Moore et al., 2015c). Modelling predictions of *PLS* expression patterning are confirmed experimentally. This study established how auxin and gene expression patterning in the Arabidopsis root can emerge in the context of gene expression, signal transduction and metabolic conversions.

Modelling crosstalk regulation of auxin, cytokinin and ethylene patterning in root development requires the integration of a variety of experimental data (Figure 1 and Table S1) within a root structure. A schematic description of a methodology on how to combine experimental and modelling analysis is described in Figure 2.

---Figure 2 here---

A generalised rectangular root structure for modelling crosstalk regulation of auxin, cytokinin and ethylene patterning in root development (Grieneisen et al., 2007; Moore et al., 2015c) has several drawbacks that may hinder the analysis of hormonal crosstalk. Firstly, it does not consider the actual size and geometrical shape of cells in the root. Secondly, it does not include all cell types. Thirdly, it cannot properly describe cell wall structure, and fourthly, it cannot describe the extracellular matrix. Thus, a method was developed to digitise a root

structure (Moore et al., 2017) that is constructed using experimental imaging (from Band et al., 2014). Significant advances of the realistic root geometry are that each cell has its own cell wall, and the extracellular matrix is realistically related to the shape of each cell, as shown in Figure 3. These important features were not included in other modelling analysis (Band et al., 2014; Grieneisen et al., 2007; Mironova et al., 2010; Moore et al., 2015c).

---Figure 3 here---

In each cell, auxin, cytokinin and ethylene, as well as other molecules involved in gene expression, signal transduction and metabolic conversion processes form a crosstalk network. To analyse such a complex system (Figure 1 and Table S1), it is necessary to decide how to simplify the network to study specific biological questions and how to validate the simplified network using experimental measurements. By iteratively combining modelling and experimental measurements, we have constructed a crosstalk network between auxin, cytokinin and ethylene (Liu et al., 2010b; 2013; Moore et al., 2015c; 2017; Figure 4). This network was computationally examined to elucidate how auxin, cytokinin and ethylene interact within the root.

---Figure 4 here---

After parameterising the model (Liu et al., 2010b; Moore et al., 2015c, 2017), the model makes various predictions that can be validated by other independent experiments or that can be used to design novel experiments, as summarised in Figure 5. Figure 5a shows that, after parameter fitting using experimentally derived images (Moore et al., 2015c; 2017), modelled auxin patterning is similar to its experimental counterpart (Moore et al., 2015c; 2017). Predictions about the rate of auxin biosynthesis in different areas of the root (Figure 5b), percentage changes in PIN1, 2 patterning relative to wild-type after 100% loss of PIN3 activity (Figure 5c), and percentage changes in PIN1 and PIN 2 patterning relative to wild-type after 100% loss of the activity of PINs 3, 4, and 7 (Figure 5d) are validated by independent experiments shown in Petersson et al. (2009), Omelyanchuk et al. (2016) and Blilou et al. (2005), respectively.

Specifically, Figure 5b predicts that auxin biosynthesis increases towards the Arabidopsis root apex. In the QC and columella, auxin biosynthesis rates are high. In the epidermal cells of the elongation zone, auxin biosynthesis rates are also relatively high. These modelling predictions for auxin biosynthesis rate patterning are similar to those found by experimental observations (Figure 5 in Petersson et al., 2009). Figure 5c predicts that the PIN1 expression

domain extends further to the elongation zone for 100% loss of PIN3. This prediction is similar to experimental observations (Figure 6 in Omelyanchuk et al., 2016). Figure 5d predicts that PIN1 and PIN2 concentrations increase in the plasma membrane of vascular cells for the combined 100% loss of PIN3, PIN4 and PIN7. This is similar to experimental observations for the *pin3pin4pin7* triple mutant (Blilou et al., 2005).

These similarities imply that the model has correctly integrated the experimental knowledge available in the literature (Figure 1 and Table S1). They also point to novel experimental directions. For example, novel experiments need to address how auxin biosynthesis pathways (Zhao 2010; 2014) are regulated by auxin, cytokinin and ethylene to generate the auxin biosynthesis pattern in Figure 5b. Figures 5c and 5d require further experimental measurements to establish whether patterning changes of PIN1 and in PIN2 in the mutants are regulated at gene expression or at other levels.

Predictions of percentage changes in auxin concentration patterning relative to wild-type after 20% loss of AUX1 and LAX2, 3 activity (Figure 5e), and after 20% gain of AUX1 and LAX2, 3 activity (Figure 5f), and percentage changes in auxin concentration patterning relative to wild-type (auxin apoplastic diffusion rate: 220 $\mu m^2 s^{-1}$) after reducing auxin apoplastic diffusion rate to 20 $\mu m^2 s^{-1}$ (Figure 5g), require novel experimental design for validation. The prediction about patterning of cytokinin concentration (Figure 5h) is largely different from experimental observations (Antoniadi et al. 2015) and therefore raises further questions for future research. For example, which kind of regulatory relationships in Figure 4 should be further explored to generate cytokinin patterning that is in agreement with experimental observation? What are the roles of cytokinin transporters (Zürcher et al., 2016), metabolism (biosynthesis and degradation), and diffusion in controlling cytokinin patterning? How is auxin and cytokinin patterning regulated by each other?

---Figure 5 here---

The development of a systems model, as summarised in Figures 2-5, establishes the causal quantitative relationships for the crosstalk between auxin, ethylene and cytokinin. Due to the predictive nature of systems modelling, auxin, ethylene and cytokinin crosstalk can be rationally studied by cycling between experiments and modelling, and then back to experiments (Figures 2-5).

The importance of developing a systems modelling approach has been further demonstrated by elucidating how the metabolism and/or signalling of one hormone affects the metabolism and/or signalling of another hormone. Figure 6 summarises how modifying ethylene signalling affects auxin concentration.

--- Figure 6 here ---

Experimental data have demonstrated that manipulation of *PLS* gene or the ethylene receptor protein ETR1 alters ethylene signalling response (Casson et al. 2002; Chilley et al., 2006; Liu et al., 2010b). Figure 6 shows that modelling predictions of the trend in average auxin concentration for *pls*, *etr1* mutant, *pls-etr1* double mutant, and the PLS overexpressing transgenic, PLSox, are in agreement with experimental observations (Moore et al., 2015c). In the *pls* mutant, auxin concentration is lower than that in wildtype (Chilley et al., 2006). In the *pls etr1* double mutant, auxin concentration is higher than in *pls* mutant, but still slightly lower than that in wildtype. In PLSox, auxin concentration is higher than that in wildtype. This example demonstrates that systems modelling is a powerful tool for elucidating how ethylene signalling regulates auxin concentration in the root development.

Some important aspects of linking experimental data with systems modelling

In principle, all links described in Figure 1 could be integrated into a hormonal crosstalk network and such a network could be combined with root architecture (Figure 3), to develop a systems model. This is because all links in Figure 1 are associated with the actions of auxin, cytokinin and ethylene. However, in practice, it is currently impossible to develop a model that includes all experimentally determined links due mainly to the lack of experimental data for formulating regulatory relationships and kinetic equations suitable for modelling analysis. As will be discussed below, whether or not there are sufficient experimental data available for formulating regulatory relationships and kinetic equations is an important consideration when a systems model is developed.

First, a model for the crosstalk between auxin, cytokinin and ethylene should include links describing the biosynthesis, degradation and transport of the three hormones. This is simply because these links together control the level of the three hormones and therefore form the core part of the model, Figures 3 and 4. The kinetic equations for these links should be formulated using experimental data. For example, experimental data show that exogenous application of cytokinin may reduce the endogenous auxin concentration (Nordstrom et al., 2004). The genes involved in auxin metabolism are differentially expressed in response to

altered cytokinin levels and/or responsiveness to cytokinin in Arabidopsis (Jones and Ljung, 2011). Thus, we may consider that auxin concentration is regulated by cytokinin via gene expression and formulate the kinetic equation accordingly (Moore et al., 2015b).

Second, whether other links should be included depends on whether experimental data indicate that these links are important for regulating concentration or signalling of auxin, cytokinin and ethylene. For example, the following experimental observations indicate that *PLS* gene is important for the crosstalk between auxin, cytokinin and ethylene. In the *pls* mutant, auxin concentration is reduced, cytokinin concentration is enhanced and ethylene production remains approximately unchanged compared to wild-type (Casson et al., 2002; Chilley et al., 2006; Liu et al., 2010b). In the *PLS* overexpressing transgenic *PLSox*, auxin concentration is increased, while ethylene production remains approximately unchanged. In the ethylene resistant *pls etr1* double mutant, auxin concentration is approximately recovered to the same level as that in wild-type seedlings (Casson et al., 2002; Chilley et al., 2006; Liu et al., 2010b). In addition, expression of the *PLS* gene of *Arabidopsis* is repressed by ethylene and induced by auxin (Casson et al., 2002; Chilley et al., 2006). Furthermore, immunolocalization studies reveal that both PIN1 (Figure 1) and PIN2 protein levels increase in the *pls* mutant, and decrease in *PLSox* (Liu et al., 2013). In the ethylene-insensitive *etr1* mutant, PIN1 and PIN2 levels are lower than those in wild-type. The double mutant *pls etr1* exhibits reduced PIN1 and PIN2 levels compared to *pls* and slightly lower PIN1 and PIN2 levels compared to wild-type (Liu et al., 2013). Therefore, experimental data have shown that the *PLS* gene plays important roles in the crosstalk between auxin, ethylene and cytokinin. Thus, the links describing the action of *PLS* gene are included in the model (Figures 3 and 4).

Third, linking experimental data with systems modelling needs to consider different developmental processes. The digital root, Figure 3, which was constructed using an experimental image of Arabidopsis root (Moore et al., 2017), includes a fixed number of cells (Figure 3a). Strictly speaking, a combination of Figure 3 and Figure 4 can only study the crosstalk described in Figure 4 in the spatial setting of Figure 3. In other words, the model, Figures 3 and 4, can only be applied to study the crosstalk between auxin, cytokinin and ethylene at the developmental stage as described by Figure 3. For a different developmental stage, a different digital root should be constructed using the experimental images for that stage. The regulatory relationships such as those described in Figure 4 should be established by examining experimental data for the developmental stage. In Figure 4, a negative

regulation of auxin biosynthesis by cytokinin is described based on experimental results (Nordstrom et al., 2004). However, Jones et al. (2010) have shown that cytokinin positively regulates auxin biosynthesis in young developing tissues. Therefore, for young developing tissues, an alternative network, in which a positive regulation of auxin biosynthesis by cytokinin is described with all other regulatory relationships remaining unchanged, can be constructed. Interesting future work will be to compare modelling predictions from this alternative network with those for the existing network, Figure 4, using modelling analysis. The outcomes should be able to further elucidate the effects of regulation of auxin biosynthesis by cytokinin on root development. Thus, defining a model for a developmental process should carefully link experimental data for that process with model development.

Finally, whether or not an experimental image is a steady-state image should be further explored. Combination of Figures 3 and 4 is able to study how any component in Figure 4 temporally evolves from its initial spatial setting in Figure 3. Thus, the spatiotemporal dynamics of all components in Figure 4 can be studied. For example, the steady-state auxin patterning, Figure 5a, is established from a uniform initial auxin distribution after the transient period has died out (Moore et al., 2015c; 2017). The final steady-state image, Figure 5a, is compared with experimental images. However, whether or not an experimental image is a steady-state image is an open question to be addressed. In principle, two auxin images, which are experimentally measured at different times, could be compared and their similarities could inform whether or not an experimental image has established a steady state. On the other hand, based on Figure 3, further modelling development should explore the possibility in developing a root structure, which can temporally evolve.

In summary, with a careful combination of experimental data and model development, modelling auxin patterning, crosstalk between auxin and cytokinin, and crosstalk between auxin, cytokinin and ethylene has exemplified that systems modelling is becoming a powerful tool for elucidating the complexity of root development.

FUTURE CHALLENGES FROM A COMBINED EXPERIMENTAL AND MODELLING PERSPECTIVE

In this review, we have critically analysed the experimental data accumulated in the literature over many years and discussed how they can be integrated into a hormonal crosstalk network for auxin, ethylene and cytokinin. In particular we have demonstrated the complex nature of

these hormonal signalling pathways and how cross-links between different pathways significantly increase complexity. We further reviewed the development of modelling auxin patterning, crosstalk between auxin and cytokinin, and crosstalk between auxin, cytokinin and ethylene. We discussed how modelling can provide insight into the action of auxin, cytokinin and ethylene in root development and critically analysed some the possible limitations of existing models in the literature. We discussed how to formulate a methodology that iteratively combines experiments with systems modelling analysis and emphasised why such a methodology is essential for tackling the complexity of crosstalk between auxin, cytokinin and ethylene in root development.

Here we further discuss some possible future challenges for investigating hormonal crosstalk from a combined experimental and modelling perspective.

Crosstalk with other hormones and beyond

Crosstalk between auxin, ethylene and cytokinin can be further expanded to include additional hormones. For example, DELLA proteins are central regulators in gibberellin (GA) signalling and growth. They interact with brassinosteroids (Chaiwanon et al., 2016), ethylene (An et al., 2012) and jasmonate (Song et al., 2014). It is known that brassinosteroids and auxin have opposite patterns and effects on cell elongation in the root tip, where they antagonistically regulate growth dynamics (Chaiwanon et al., 2015). It is also known that abscisic acid (ABA) regulates root elongation through the activities of auxin and ethylene in Arabidopsis (Thole et al., 2014; Rowe et al., 2016). Therefore, regulation of root development by brassinosteroids, GA, jasmonate and ABA can also be integrated into crosstalk between auxin, ethylene and cytokinin to develop a combined experimental and modelling study. The combined actions of these hormones can be analysed as an integrated system for root development in the future.

In addition to multiple hormones, there are other regulators that influence root development. For example, it is shown that boron deficiency inhibits root cell elongation via an auxin, ethylene or ROS-dependent pathway in Arabidopsis seedlings (Camacho-Cristóbal et al., 2015). Boron deficiency results in early repression of a cytokinin receptor gene (Abreu et al., 2014). A mathematical model has been developed to study the spatial distribution of boron in the root of Arabidopsis (Shimotohno et al., 2015). In addition, it is also shown that polyamines are able to affect Arabidopsis root development (Gao et al., 2014). Therefore,

future research could also try to integrate boron and polyamines with auxin, cytokinin and ethylene crosstalk.

The role of hormonal crosstalk under different stress conditions can also be explored. By integrating experimental data into hormonal crosstalk networks to formulate a systems view of root growth regulation by multiple hormones, Rowe et al. (2016) revealed that ABA regulates root growth under osmotic stress conditions by acting in a hormonal network with auxin, cytokinin and ethylene. It was shown that PIN1 levels are reduced under osmotic stress in an ABA-dependent manner, overriding ethylene effects; and that the interplay among ABA, auxin, cytokinin and ethylene is tissue-specific, as evidenced by differential responses of PIN1 and PIN2 to osmotic stress. These results imply that a combined experimental and modelling study, as exemplified in Figures 2-5 in this review, could be further developed to study plant stress responses in the future.

Different downstream responses of each hormone

It is well established that each hormone is able to regulate a wide range of responses. For example, genome-wide transcriptional responses to auxin have a broad range of tissue specificity. Auxin can enhance or repress gene expression in a cell-type specific manner (Bargmann et al., 2013; Birnbaum et al., 2003). In addition, transcriptional responses to auxin in root development are involved in a complex mechanism (Salehin et al., 2015; Weijers and Wagner, 2016). Therefore, how to establish the relationship between the auxin gradient, that emerges from crosstalk between auxin, cytokinin and ethylene in root development (Figure 5a), and various auxin responses is a challenging future research problem. Similarly, how crosstalk between auxin, cytokinin and ethylene in root development interplays with cytokinin and ethylene responses should also be explored.

Hormonal crosstalk in a growing root

In a growing root, the interaction of hormones with root architecture is dynamic. Cell elongation and division can change cell shape and volume, which in turn, may affect hormone concentration, patterning and response. Regulation of root growth by auxin was previously modelled by considering both cell division and expansion, using a parsimonious model (Grieneisen et al., 2007). It is shown that cell division in the postembryonic plant follows certain rules (von Wangenheim et al., 2016) and that auxin can override a geometric division rule for some cells in root development (Yoshida et al., 2014). Therefore, coupling

the auxin gradient to a cell division rule to explore regulation of root development by hormonal crosstalk, which in turn regulates auxin gradient, is an important aspect of future research.

Experimental evidence also indicates that modelling the genetic control of cell division in plant morphogenesis needs to address various aspects, from intrinsic growth properties such as tensile stress (Louveaux et al., 2016) and membrane extensibility (Cosgrove, 2016), to mechanical constraints from neighbouring regions (Coen and Rebocho, 2016). Moreover, modelling genetic control of cell division in plant morphogenesis also needs to consider complexity in form and shape (Reuille et al., 2015). Thus, a grand challenge in analysing how root development is regulated by hormonal crosstalk, needs to comprehensively integrate the actions of hormonal crosstalk with plant morphogenesis. An important initial step is to establish how hormonal crosstalk in root development regulates the genetic control of cell division. Previously, regulation of the rate of cell division by auxin, cytokinin and ethylene was modelled by considering that cell division is governed by both auxin and a division factor that combines the actions of cytokinin and ethylene (Mironova et al., 2010).

AUTHOR CONTRIBUTIONS

JL and SM wrote the first draft of the text, CC and KL edited the draft.

ACKNOWLEDGEMENTS

We thank the financial support of Research Councils UK for funding to KL and JL, Durham University to SM, the Fundamental Research Funds for the Central Universities (2662017PY068) and Durham International Senior Research Fellowship co-funded by Durham University's Institute of Advanced Study (IAS) and the European Union to CC.

REFERENCES

Abreu, I., Poza, L., Bonilla, I., and Bolaños L. (2014). Boron deficiency results in early repression of a cytokinin receptor gene and abnormal cell differentiation in the apical root meristem of *Arabidopsis thaliana*. Plant Physiol. Biochem. 77: 117–121.

Adamowski, M, and Friml, J. (2015). PIN-dependent auxin transport: action, regulation, and evolution. Plant Cell 27: 20–32.

An, F., Zhang, X., Zhu, Z., Ji, Y., He, W., Jiang, Z., Li, M., and Guo, H. (2012). Coordinated regulation of apical hook development by gibberellins and ethylene in etiolated Arabidopsis seedlings. Cell Res. 22: 915–927.

Antoniadi, I., Plackova, L., Simonovik, B., Dolezal, K., Turnbull, C., Ljung, K., and Novak, O. (2015). Cell-type-specific cytokinin distribution within the Arabidopsis primary root apex. Plant Cell 27: 1955-1967.

Band, L.R., Wells, D.M., Fozard, J.A., Ghetiu, T., French, A.P., Pound, M.P., Wilson, M.H., Yu, L., Li, W., Hijazi, H.I. et al. (2014). Systems analysis of auxin transport in the Arabidopsis root apex. Plant Cell 26: 862–875.

Bargmann, B.O.R., Vanneste, S., Krouk, G., Nawy, T., Efroni, I., Shani, E., Choe, G., Friml, J., Bergmann, D.C., Estelle, M., and Birnbaum, KD. (2013). A map of cell type-specific auxin responses. Mol. Syst. Biol. 9: 688.

Bennett ,T., Hines, G., van Rongen, M., Waldie, T., Sawchuk, M.G., Scarpella, E., Ljung, K., and Leyser, O. (2016). Connective auxin transport in the shoot facilitates communication between shoot apices. PLoS Biology 14: e1002446.

Birnbaum, K., Shasha, D.E., Wang, J.Y., Jung, J.W., Lambert, G.M., Galbraith, D.W., and Benfey, P.N. (2003). A gene expression map of the Arabidopsis root. Science 302: 1956–1960.

Bisson, M.M.A., and Groth, G. (2010). New insight in ethylene signaling: autokinase activity of ETR1 modulates the interaction of receptors and EIN2. Mol Plant 3: 882-889.

Blilou, I., Xu, J., Wildwater, M., Willemsen, V., Paponov, I., Friml, J., Heidstra, R., Aida, M., Palme, K., and Scheres, B. (2005). The PIN auxin efflux facilitator network controls growth and patterning in Arabidopsis roots. Nature 433: 39-44.

Camacho-Cristóbal, J.J., Martín-Rejano, E.M., Herrera-Rodríguez, M.B., Navarro-Gochicoa, M.T., Rexach, J., and González-Fontes, A. (2015). Boron deficiency inhibits root cell elongation via an ethylene/auxin/ROS dependent pathway in Arabidopsis seedlings. J. Exp. Bot. 66: 3831–3840.

Cary, A.J., Liu, W., and Howell, S.H. (1995). Cytokinin action is coupled to ethylene in its effects on the inhibition of root and hypocotyl elongation in *Arabidopsis thaliana* seedlings. Plant Physiol. 107: 1075-1082.

Casson, S.A., Chilley, P.M., Topping, J.F., Evans, I.M., Souter, M.A., and Lindsey, K. (2002). The POLARIS gene of Arabidopsis encodes a predicted peptide required for correct root growth and leaf vascular patterning. Plant Cell 14: 1705–1721.

Chaiwanon J, and Wang Z.Y. (2015). Spatiotemporal brassinosteroid signaling and antagonism with auxin pattern stem cell dynamics in Arabidopsis roots. Curr. Biol. 25: 1031–1042.

Chaiwanon, J., Wang, W., Zhu, J.Y., Oh, E., and Wang, Z.Y. (2016). Information integration and communication in plant growth regulation. Cell 164: 1257-1268.

Chandler, J.W. (2009). Auxin as compère in plant hormone crosstalk. Planta 231: 1–12.

Chandler, J.W., and Werr, W. (2015). Cytokinin-auxin crosstalk in cell type specification. Trends Plant Sci. 20: 291-300.

Chilley, P.M., Casson, S.A., Tarkowski, P., Hawkins, N., Wang, K.L., Hussey, P.J., Beale, M., Ecker, J.R., Sandberg, G.K., and Lindsey, K. (2006). The POLARIS peptide of Arabidopsis regulates auxin transport and root growth via effects on ethylene signaling. Plant Cell 18: 3058–3072.

Cho, M., and Cho, H.T. (2012). The function of ABCB transporters in auxin transport. Plant Signal. Behav. 8, pii: e22990.

Coen, E., and Rebocho, A.B. (2016). Resolving conflicts: Modeling genetic control of plant morphogenesis. Developmental Cell 38: 579–583.

Cosgrove, D.J. (2016). Plant cell wall extensibility: connecting plant cell growth with cell wall structure, mechanics, and the action of wall-modifying enzymes. J. Exp. Bot. 67: 463–476.

De Rybel, B., Adibi, M., Breda, A.S., et al. (2014). Integration of growth and patterning during vascular tissue formation in Arabidopsis. Science 345: 1255215.

Del Bianco, M., Giustini, L., and Sabatini, S. (2013). Spatiotemporal changes in the role of cytokinin during root development. New Phytol. 199: 324-338.

Dello Ioio, R., Linhares, F.S., Scacchi, E., Casamitjana-Martinez, E., Heidstra, R., Costantino, P., and Sabatini, S. (2007). Cytokinins determine Arabidopsis root-meristem size by controlling cell differentiation. Curr. Biol. 17: 678–682.

Dello Ioio, R., Nakamura, K., Moubayidin, L., Perilli, S., Taniguchi, M., Morita, M.T., Aoyama, T., Costantino, P., and Sabatini, S. (2008). A genetic framework for the control of cell division and differentiation in the root meristem. Science 322: 1380–1384.

Depuydt, S., and Hardtke, C.S. (2011). Hormone signalling crosstalk in plant growth regulation. Curr. Biol. 21: R365-R373.

el-Showk, S., Help-Rinta-Rahko, H., Blomster, T., Siligato, R., Marée, A.F.M., Mähönen, A.P., and Grieneisen, V.A. (2015). Parsimonious model of vascular patterning

links transverse hormone fluxes to lateral root initiation: auxin leads the way, while cytokinin levels out. PLoS Comput. Biol. 11: 1–40.

Fell D. (1997). Understanding the Control of Metabolism, Portland Press.

Friml, J., Benkova, E., Blilou, I., Wisniewska, J., Hamann, T., Ljung, K., Woody, S., Sandberg, G., Scheres, B., Jurgens, G. et al. (2002). AtPIN4 mediates sink-driven auxin gradients and root patterning in Arabidopsis. Cell 108: 661–673.

Gao, H., Cheng, Z., and Chen, C. (2014). Effects of polyamine biosynthetic inhibitor d-arginine on root growth in *Arabidopsis thaliana* seedlings. Plant Physiol. J. 49: 1082-1088.

Garay-Arroyo, A., De La Paz, S.M., Garcıa-Ponce, B., et al. (2012). Hormone symphony during root growth and development. Developmental Dynamics 241: 1867–1885.

Geisler, M., and Murphy, A.S. (2006). The ABC of auxin transport: The role of p-glycoproteins in plant development. FEBS Letters 580: 1094–1102**.**

Grieneisen, V.A., Xu, J., Maree, A.F.M., Hogeweg, P., and Scheres, B. (2007). Auxin transport is sufficient to generate a maximum and gradient guiding root growth. Nature 449: 1008–1013.

Grieneisen, V.A., Scheres, B., Hogeweg, P. M., and Marée, A.F. (2012). Morphogengineering roots: Comparing mechanisms of morphogen gradient formation. BMC Syst. Biol. 6: 37.

Hall, B.P., Shakeel, S.N., Amir, M., Haq, N.U., Qu, X., and Schaller, G. (2012). Histidine kinase activity of the ethylene receptor ETR1 facilitates the ethylene response in Arabidopsis. Plant Physiol. 159: 682-695.

Hass, C., Lohrmann, J., Albrecht, V., Sweere, U., Hummel, F., Yoo, S., Hwang, I., Zhu, T., Schafer, E., Kudla, J., and Harter, K.T. (2004). The response regulator 2 mediates ethylene signaling and hormone signal integration in Arabidopsis. EMBO J. 23: 3290–3302.

Hirose, N., Takei, K., Kuroha, T., Kamada-Nobusada, T., Hayashi, H., and Sakakibara, H. (2008). Regulation of cytokinin biosynthesis, compartmentalization and translocation. J Exp Bot. 59: 75-83.

Hurny, A., and Benkova, E. (2017) Methodological advances in auxin and cytokinin biology. In: Dandekar T., Naseem M. (eds) Auxins and Cytokinins in Plant Biology. Methods in Molecular Biology, vol 1569. Humana Press, New York, NY.

Hwang, I., and Sheen, J. (2001). Two-component circuitry in Arabidopsis cytokinin signal transduction. Nature 413: 383-389.

Jones, B., Gunneras, S.A., Petersson, S.V., Tarkowski, P., Graham, N., May, S., Dolezal, K., Sandberg, G., and Ljung, K. (2010). Cytokinin regulation of auxin synthesis in

Arabidopsis involves a homeostatic feedback loop regulated via auxin and cytokinin signal transduction. Plant Cell 22: 2956–2969.

Jones, B., and Ljung, K. (2011)**.** Auxin and cytokinin regulate each other's levels via a metabolic feedback loop. Plant Signal Behav.1, 6(6).

Kamiyoshihara, Y., Tieman, D.M., Huber, D.J., and Klee, H.J. (2012). Ligand induced alterations in the phosphorylation state of ethylene receptors in tomato fruit. Plant Physiol. 160:488-497.

Karlebach, G., and Shamir, R. (2008). Modelling and analysis of gene regulatory networks. Nat. Rev. Mol. Cell Biol. 9: 770–780.

Kieber, J.J., and Schaller, G.E. (2014). Cytokinins. The Arabidopsis Book 12: e0168, doi/10.1199/tab.0168.

Klipp, E., Liebermeister, W., Wierling, C., et al. (2009). Systems Biology, a Text Book. Weinheim: WILEY-VCH Verlag GmbH & Co. KgaA.

Kramer, E.M. (2004). PIN and AUX/LAX proteins: their role in auxin accumulation. Trends Plant Sci. 9: 578–582.

Larsen, P.B. (2015). Mechanisms of ethylene biosynthesis and response in plants. Essays Biochem. 58: 61-70.

Li, S.B., Xie, Z.Z., Hu, C.G., and Zhang, J.Z. (2016). A review of auxin response factors (ARFs) in plants. Front Plant Sci. 7: 47.

Liu, Q., Xu, C., and Wen, C.K. (2010a). Genetic and transformation studies reveal negative regulation of ERS1 ethylene receptor signaling in Arabidopsis. BMC Plant Biol. 10: 60.

Liu, J.L., Mehdi, S., Topping, J., Tarkowski, P., and Lindsey, K. (2010b). Modelling and experimental analysis of hormonal crosstalk in Arabidopsis. Molec. Syst. Biol. 6: 373.

Liu, J.L., Mehdi, S., Topping, J., Friml, J., and Lindsey, K. (2013). Interaction of PLS and PIN and hormonal crosstalk in Arabidopsis root development. Frontiers Plant Sci. 4: 75.

Liu, J., Rowe, J., and Lindsey, K. (2014). Hormonal crosstalk for root development: a combined experimental and modeling perspective. Frontiers Plant Sci. 5: 116.

Louveaux, M., Julien, J.D., Mirabet, V., Boudaoud, A., and Hamant, O. (2016). A cell division rule based on tensile stress in *Arabidopsis thaliana*. Proc. Natl. Acad. Sci. USA 113: E4294–4303.

Ludwig-Müller, J. (2011). Auxin conjugates: their role for plant development and in the evolution of land plants. J. Exp. Bot. 62: 1757–1773.

Ljung, K., (2013). Auxin metabolism and homeostasis during plant development. Development 140: 943–950.

Mason, M.G., and Schaller, G.E. (2005). Histidine kinase activity and the regulation of ethylene signal transduction. Can. J. Bot. 83: 563–570

Mellor, N., Adibi, M., El-Showk, S., De Rybel, B., King, J., Mahonen, A.P., Weijers, D., and Bishopp, A. (2017). Theoretical approaches to understanding root vascular patterning: a consensus between recent models. J. Exp. Bot. 68: 5–16.

Merchante, C., Alonso, J.M., and Stepanova, A.N. (2013). Ethylene signaling: simple ligand, complex regulation. Curr. Opin. Plant Biol. 16: 554–560.

Mironova, V.V., Omelyanchuk, N.A., Yosiphon, G., Fadeev, S.I., Kolchanov, N.A., Mjolsness, E., et al. (2010). A plausible mechanism for auxin patterning along the developing root. BMC Syst. Biol. 4: 98.

Moore, S., Zhang, X., Liu, J., and Lindsey, K. (2015a). Some fundamental aspects of modelling auxin patterning in the context of auxin-ethylene-cytokinin crosstalk. Plant Sig. Behavior, 10: e1056424.

Moore, S., Zhang, X., Liu, J., and Lindsey, K. (2015b). Modelling Plant Hormone Gradients. In: eLS. John Wiley & Sons, Ltd: Chichester. DOI: 10.1002/9780470015902.a0023733.

Moore, S., Zhang, X., Mudge, A., Rowe, J.H., Topping, J.F., Liu, J., and Lindsey, K. (2015c). Spatiotemporal modelling of hormonal crosstalk explains the level and patterning of hormones and gene expression in *Arabidopsis thaliana* wildtype and mutant roots. New Phytol. 207: 1110–1122.

Moore, S., Liu, J., Zhang, X., and Lindsey, K. (2017). A recovery principle provides insight into auxin pattern control in the Arabidopsis root. Scientific Reports 7: 430004.

Muraro, D., Byrne, H., King, J., Voß, U., Kieber, J., and Bennet,t M. (2011). The influence of cytokinin–auxin cross-regulation on cell-fate determination in Arabidopsis thaliana root development. J. Theor. Biol. 283: 152–167.

Muraro, D., Byrne, H., King, J., and Bennett, M. (2013). The role of auxin and cytokinin signalling in specifying the root architecture of *Arabidopsis thaliana*. J. Theor. Biol. 317: 71–86.

Muraro, D., Mellor, N., Pound, M.P., et al. (2014). Integration of hormonal signaling networks and mobile microRNAs is required for vascular patterning in Arabidopsis roots. Proc. Natl. Acad. Sci. USA 111: 857–862.

Muraro, D., Larrieu, A., Lucas, M., Chopard, J., Byrne, H., Godin, C., et al. (2016). A multi-scale model of the interplay between cell signalling and hormone transport in specifying the root meristem of *Arabidopsis thaliana*. J. Theor. Biol. 404: 182-205.

Nordstrom, A., Tarkowski, P., Tarkowska, D., Norbaek, R., Astot, C., Dolezal, K., and Sandberg, G. (2004) Auxin regulation of cytokinin biosynthesis in Arabidopsis thaliana: a factor of potential importance for auxin–cytokinin-regulated development. Proc Natl Acad Sci USA 101: 8039–8044.

Omelyanchuk, N.A., Kovrizhnykh, V.V., Oshchepkova, E.A., Pasternak, T., Palme, K., and Mironova, V.V. (2016). A detailed expression map of the PIN1 auxin transporter in *Arabidopsis thaliana* root. BMC Plant Biology 16: (Suppl. 1), 5.

Paque, S., and Weijers, D. (2016). Auxin: the plant molecule that influences almost anything. BMC Biol. 14: 67.

Petersson, S.V., Johansson, A.I., Kowalczyk, M., Makoveychuk, A., Wang, J.Y., Moritz, T., Grebe, M., Benfey, P.N., Sandberg, G., and Ljung, K. (2009). An auxin gradient and maximum in the Arabidopsis root apex shown by high-resolution cell-specific analysis of IAA distribution and synthesis. Plant Cell 21: 1659–1668.

Reuille, P.B., Routier-Kierzkowska, A.L., Kierzkowski, D., Bassel, G.W., Schupbach, T., Tauriello, G., Bajpai, N., Strauss, S., Weber, A., Kiss, A. et al. (2015). MorphoGraphX: a platform for quantifying morphogenesis in 4D. eLife 4: e05864.

Rowe, J.H., Topping, J.F., Liu, J., and Lindsey, K. (2016). Abscisic acid regulates root growth under osmotic stress conditions via an interacting hormonal network with cytokinin, ethylene and auxin. New Phytol. 211: 225–239.

Rutschow, H.L., Baskin, T.I., and Kramer, E.M. (2014). The carrier AUXIN RESISTANT (AUX1) dominates auxin flux into Arabidopsis protoplasts. New Phytol. 204: 536–544.

Ruzicka, K., Simásková, M., Duclercq, J., Petrásek, J., Zazímalová, E., Simon, S., Friml, J., Van Montagu, M.C., and Benková E. 2009. Cytokinin regulates root meristem activity via modulation of the polar auxin transport. Proc. Natl. Acad. Sci. USA 106: 4284–4289.

Salehin, M., Bagchi, R., and Estelle, M. (2015). SCFTIR1/AFB-based auxin perception: mechanism and role in plant growth and development. Plant Cell 27: 9-19.

Santner, A., and Estelle, M. (2009). Recent advances and emerging trends in plant hormone signalling. Nature 459: 1071-1078

Schaller, G.E., and Kieber, J.J. (2002). Ethylene. The Arabidopsis Book 1: e0071, doi/10.1199/tab.0071

Schaller, G.E., Bishopp, A., and Kieber, J.J. (2015). The yin-yang of hormones: cytokinin and auxin interactions in plant development. Plant Cell 27: 44–63.

Shakeel, S.N., Wang, X., Binder, B.M., and Schaller, G.E. (2013). Mechanisms of signal transduction by ethylene: overlapping and non-overlapping signalling roles in a receptor family. AoB Plants 5: plt010.

Shimotohno, A., Sotta, N., Sato, T., De Ruvo, M., Maree, A.F.M., Grieneisen, V.A., and Fujiwara, T. (2015). Mathematical modeling and experimental validation of the spatial distribution of boron in the root of *Arabidopsis thaliana* identify high boron accumulation in the tip and predict a distinct root tip uptake function. Plant Cell Physiol. 56: 620–630.

Skoog F, and Miller CO. (1957). Chemical regulation of growth and organ formation in plant tissue cultured in vitro. Symp. Soc. Exp. Biol. 11: 118-30.

Song, S., Qi, T., Wasternack, C., and Xie, D. (2014). Jasmonate signaling and crosstalk with gibberellin and ethylene. Curr. Opin. Plant Biol. 21: 112–119.

Stoma, S., Lucas, M., Chopard, J., Schaedel, M., Traas, J., Godin, C. (2008). Flux-based transport enhancement as a plausible unifying mechanism for auxin transport in meristem development. PLoS Computational Biology4: e1000207.

Su, Y.H., Liu, Y.B., and Zhang, X.S. (2011). Auxin-cytokinin interaction regulates meristem development. Mol Plant. 4: 616-25.**Swarup, R., and Peret, B.** (2012). AUX/LAX family of auxin influx carriers-an overview. Frontiers Plant Sci. 3: 225.

Thole, J.M., Beisner, E.R., Liu, J., Venkova, S.V., and Strader, L.C. 2014. Abscisic acid regulates root elongation through the activities of auxin and ethylene in *Arabidopsis thaliana*. G3 (Bethesda) 4: 1259–1274.

Tivendale, N.D., and Cohen, J.D. (2015). Analytical history of auxin. J. Plant Growth Regul. 34: 708-722.

van Berkel, K., de Boer, R.J., Scheres, B. and ten Tusscher, K. (2013) Polar auxin transport: models and mechanisms. Development 140: 2253–2268.

Van de Poel, B., Smet, D., and Van Der Straeten, D, (2015) Ethylene and hormonal cross talk in vegetative growth and development. Plant Physiol 169: 61–72.

van den Berg, T., Korver, R. A., Testerink, C. and ten Tusscher, K. H. W. J. (2016). Modeling halotropism: a key role for root tip architecture and reflux loop remodeling in redistributing auxin. Development 143, 3350-3362.

Vanstraelen, M., and Benkova, E. (2012). Hormonal interactions in the regulation of plant development. Ann. Rev. Cell Devel. Biol. 28: 463–487.

Voet-van-Vormizeele, J., and Groth, G. (2008). Ethylene controls autophosphorylation of the histidine kinase domain in ethylene receptor ETR1. Mol. Plant 1: 380-387.

von Wangenheim, D., Fangerau, J., Schmitz, A., Smith, R.S., Leitte, H., Stelzer, E.H.K., and Maizel, A. (2016). Rules and self-organizing properties of postembryonic plant organ cell division patterns. Curr. Biol. 26: 439-449.

Weijers, D., and Wagner, D. (2016). Transcriptional responses to the auxin hormone. Ann. Rev. Plant Biol. 67: 539-574.

Werner, T., Motyka, V., Laucou, V., Stems, R., Van Onckelen, H., and Schmulling, T. (2003). Cytokinin deficient transgenic Arabidopsis plant show multiple developmental alterations indicating opposite function of cytokinins in the regulation of shoot and root meristem activity. Plant Cell 15: 2532–2550.

Weyers, D.B.W., and Paeterson, N.W. (2001). Plant hormones and the control of physiological processes. New Phytol. 152: 375-407.

Xuan, W., Band, L. R., Kumpf, R. P., Van Damme, D., Parizot, B., De Rop, G., Opdenacker, D., Moller, B. K., Skorzinski, N., Njo, M. F. et al. (2016). Cyclic programmed cell death stimulates hormone signaling and root development in Arabidopsis. Science 351, 384-387.

Yoshida, S., Barbier de Reuille, P., Lane, B., Bassel, G.W., Prusinkiewicz, P., Smith, R.S., and Weijers, D. (2014). Genetic control of plant development by overriding a geometric division rule. Developmental Cell 29: 75–87.

Zazimalova, E., Murphy, A.S., Yang, H., Hoyerova, K., and Hosek, P. (2010). Auxin transporters—why so many? Cold Spring Harbor Perspec. Biol. 2: a001552.

Zhao Y. (2010). Auxin biosynthesis and its role in plant development. Ann. Rev. Plant Biol. 61: 49-64.

Zhao, Y. (2014). Auxin biosynthesis. The Arabidopsis Book 12: e0173, doi/10.1199/tab.0173.

Zürcher, E., Liu, J., Donato, M.D., Geisler, M., and Muller, B. (2016). Plant development regulated by cytokinin sinks. Science 353: 1027–1030.

Zürcher, E., and Müller, B. (2016). Cytokinin synthesis, signaling, and function - advances and new insights. Int Rev Cell Mol Biol. 324:1-38.

Zürcher, E., Tavor-Deslex, D., Lituiev, D., Enkerli, K., Tarr, P.T., and Müller, B. (2013). A robust and sensitive synthetic sensor to monitor the transcriptional output of the cytokinin signaling network in planta. Plant Physiol. 161: 1066–1075.

ACCEPTED MANUSCRIPT

Figure and Table Legends

Figure 1. Integration of experimental data reveals multiple layers of complexity in auxin, cytokinin and ethylene crosstalk in Arabidopsis root development. Upper pane (green coloured links) schematically describes ethylene signalling pathways. Middle pane (black coloured links) schematically describes cytokinin signalling pathways. Lower pane (red coloured links) schematically describes auxin signalling pathways. A number by a link describes the link as summarised in Table S1. The links connecting the three panes are the main crosstalk links between auxin, cytokinin and ethylene. The three hormones are highlighted in yellow, and they are placed in different locations in the three panes, further showing their crosstalk. $\rightarrow$ stands for positive regulation; $-|$ stands for negative regulation.

Figure 2. A schematic description of a methodology shows how a variety of experiments and systems modelling can iteratively combine to tackle the complexity in auxin, cytokinin and ethylene crosstalk in Arabidopsis root development. Top pane: a variety of experimental data can be used as model inputs. Middle pane: a spatiotemporal model can be developed using experimental images and the crosstalk relationships between auxin, cytokinin and ethylene. The model can be parametrised using experimental auxin images. Lower pane: modelling predictions can be used to design novel experiments and to further revise the model.

Figure 3. Construction of a digital root. a) A realistic root map showing the individual cells, based on confocal imaging. LRC 1 to 4: lateral root cap 1 to 4; COL S1 to S5: columella S1 to S5; CE initials: cortical endodermis initials; COL initials: columella initials; QC: quiescent centre. b) Localisation of efflux (PIN3) carrier at the combined plasma membrane and cell wall entity of selected cells, with extra-cellular space between the cell walls of adjacent cells. COL S2 and S3: columella tier 2 and 3 cells. c) Localisation of influx (AUX1) carrier at the combined plasma membrane and cell wall entity of selected cells, with extra-cellular space between the cell walls of adjacent cells. COL S1, S2 and S3: columella tier 1, 2 and 3 cells. LRC 3 and 4: lateral root cap tier 3 and 4 cells. d) A magnified part of the root to show an example of how to digitise the root. The root (Figure 3a) can be discretised into grid points with any resolution (e.g. a grid point can be described by 2μm multiplied by 2μm in a 2-dimensional space). A number is assigned to each grid point to describe the identity of this grid point. For the details of constructing a digital root, see Moore et al. (2015c, 2017).

Number 132, 133, 142 and 143 are the grid points describing the cytosolic space of 132nd, 133th, 142nd, or 143th cell in the root, respectively. 1, 5, 6, 7 and 8 are used as "identifiers" to define grid points of the combined plasma membrane and cell wall entity or extracellular space, and they are also used to define distribution of both auxin efflux and influx carriers. Computational codes are used to calculate concentrations of all components in the hormonal crosstalk network (Figure 4) at all grid points of the root (Moore et al. 2015c; 2017).

Figure 4. A hormonal crosstalk network that has been constructed by iteratively combining experiments with modelling (with permission from the Supplementary Materials in Moore et al. (2017).) Symbols: Auxin: Auxin hormone, ET: ethylene, CK: Cytokinin, PINm: PIN mRNA, PINp: PIN protein, PLSm: POLARIS mRNA, PLSp: POLARIS protein, X: Downstream ethylene signalling, Ra*: Active form of auxin receptor, Ra: Inactive form of auxin receptor, Re*: Active form of ethylene receptor, ETR1. Re: Inactive form of ethylene receptor, ETR1, CTR1*: Active form of CTR1, CTR1: Inactive form of CTR1.

Figure 5. Various modelling predictions, which can be used to design novel experiments and to further revise the model (see text for details). a) Modelled auxin concentration patterning. b) Modelled auxin biosynthesis rate. c) Modelled percentage changes in PIN1, 2 patterning relative to wild-type after 100% loss of PIN3 activity. d) Modelled percentage changes in PIN1, 2 patterning relative to wild-type after 100% loss of PIN3, 4, 7 activity. e) Modelled percentage changes in auxin concentration patterning relative to wild-type after 20% loss of AUX1 and LAX2, 3 activity. f) Modelled percentage changes in auxin concentration patterning relative to wild-type after 20% gain of AUX1 and LAX2, 3 activity. g) Modelled percentage changes in auxin concentration patterning relative to wild-type (auxin apoplastic diffusion rate: 220 $\mu m^2 s^{-1}$) after reducing auxin apoplastic diffusion rate to 20 $\mu m^2 s^{-1}$. h) Modelled cytokinin concentration patterning. For the details of how to perform modelling analysis, see Moore et al. (2015c; 2017).

Figure 6. Modelling predictions of the average auxin concentration for *pls*, *etr1* mutant, *pls-etr1* double mutant, and the PLS overexpressing transgenic, PLSox, are in agreement with experimental observations (adapted with permission from the Supplementary Materials in Moore et al. (2015c).). a) Experimental measurements. b) Modelling predictions. x-axis: different mutants. y-axis: average auxin concentration in the root.

ACCEPTED MANUSCRIPT

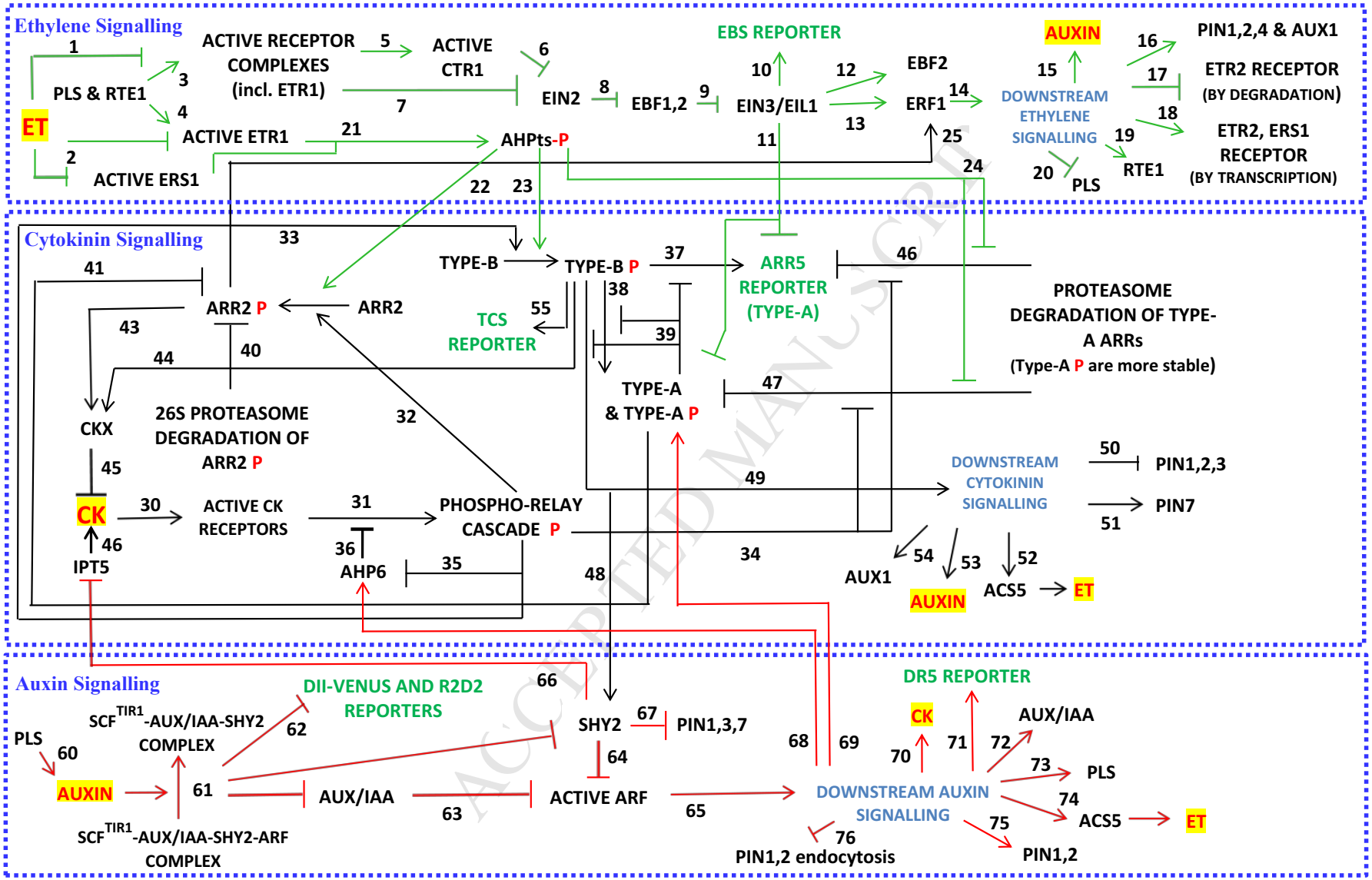

ACCEPTED MANUSCRIPT

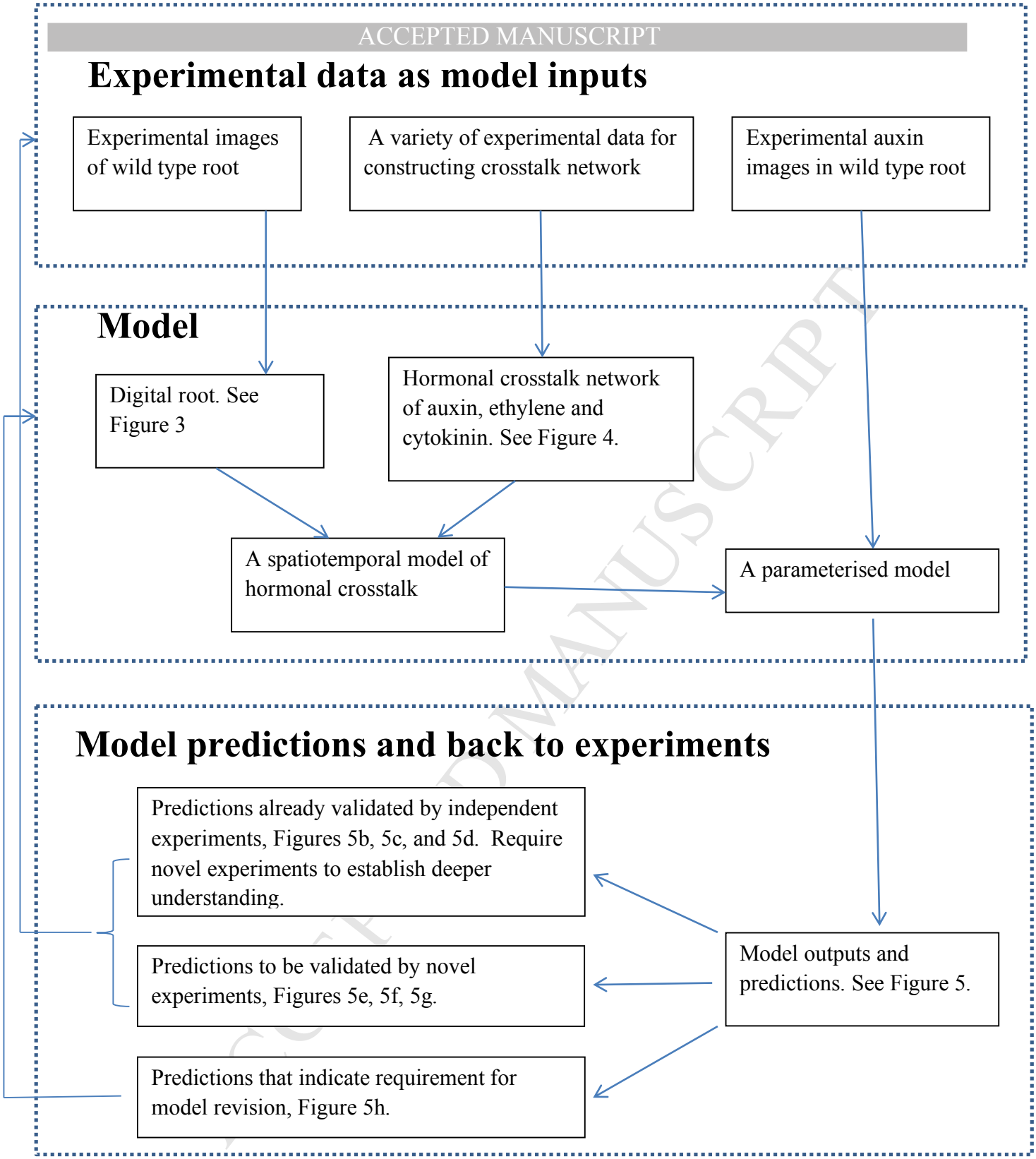

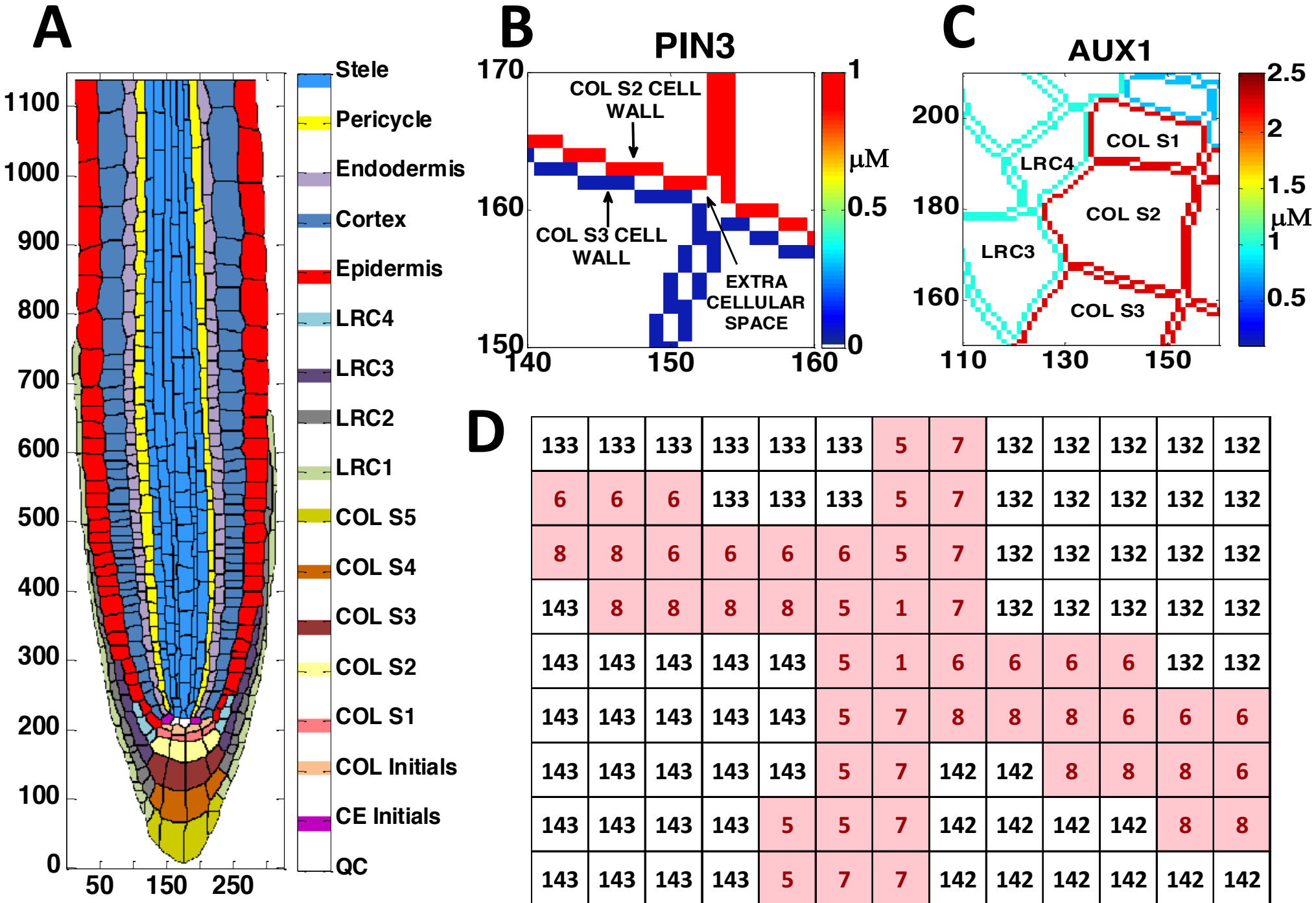

D

133	133	133	133	133	133	5	7	132	132	132	132	132
6	6	6	133	133	133	5	7	132	132	132	132	132
8	8	6	6	6	6	5	7	132	132	132	132	132
143	8	8	8	8	5	1	7	132	132	132	132	132
143	143	143	143	143	5	1	6	6	6	6	132	132
143	143	143	143	143	5	7	8	8	8	6	6	6
143	143	143	143	143	5	7	142	142	8	8	8	6
143	143	143	143	5	5	7	142	142	142	142	8	8
143	143	143	143	5	7	7	142	142	142	142	142	142
143	143	143	5	5	7	142	142	142	142	142	142	142

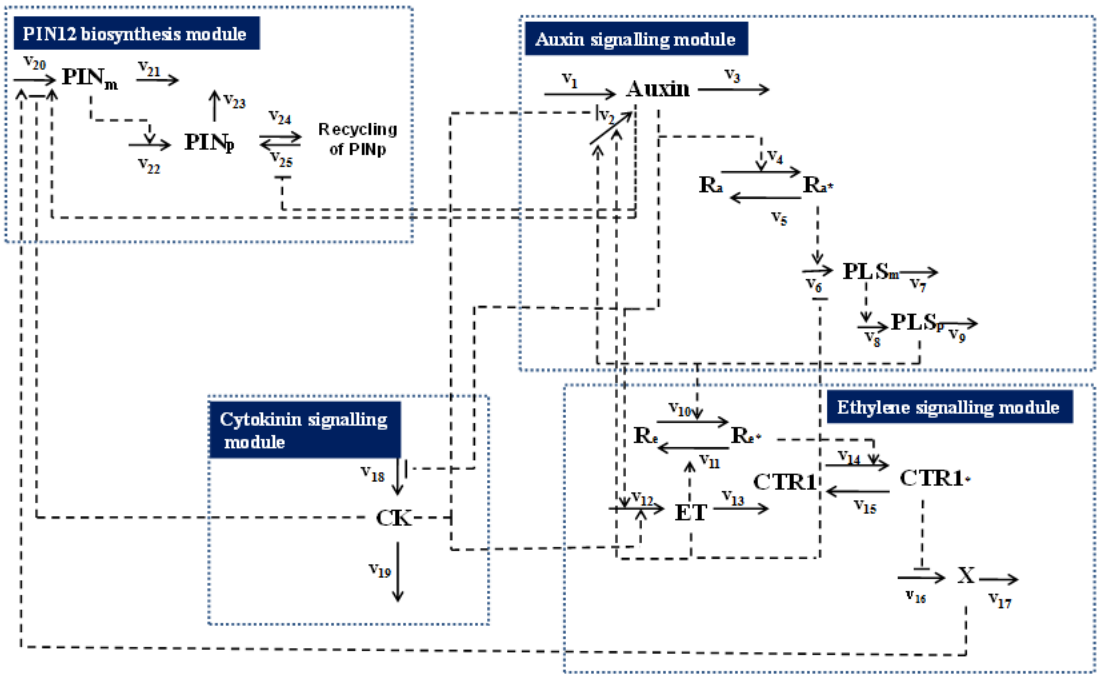

ACCEPTED MANUSCRIPT

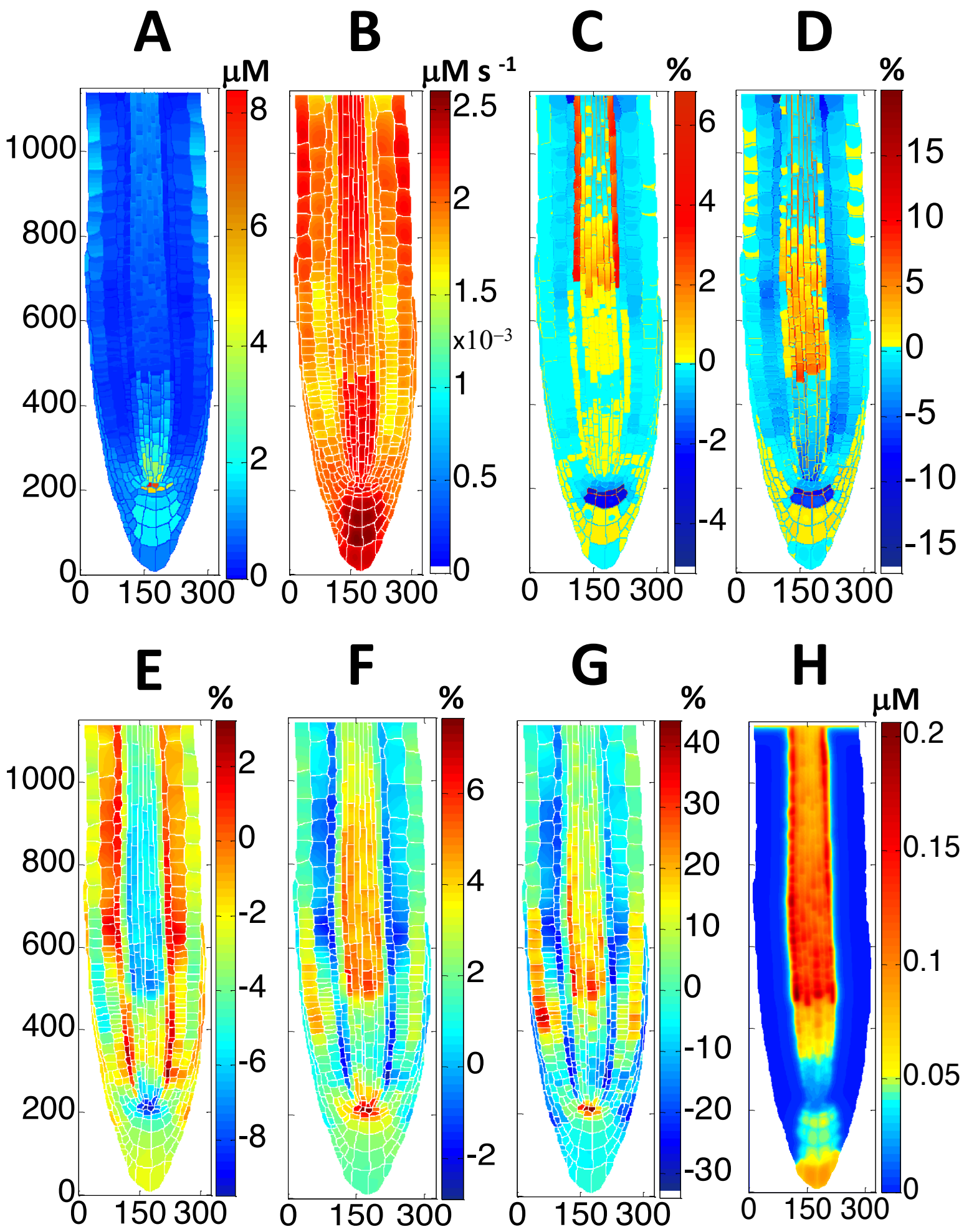
A
B
C
D
E
F
G
H
µM
µM s -1
%
x10−3
0
150
300
200
400
600
800
1000

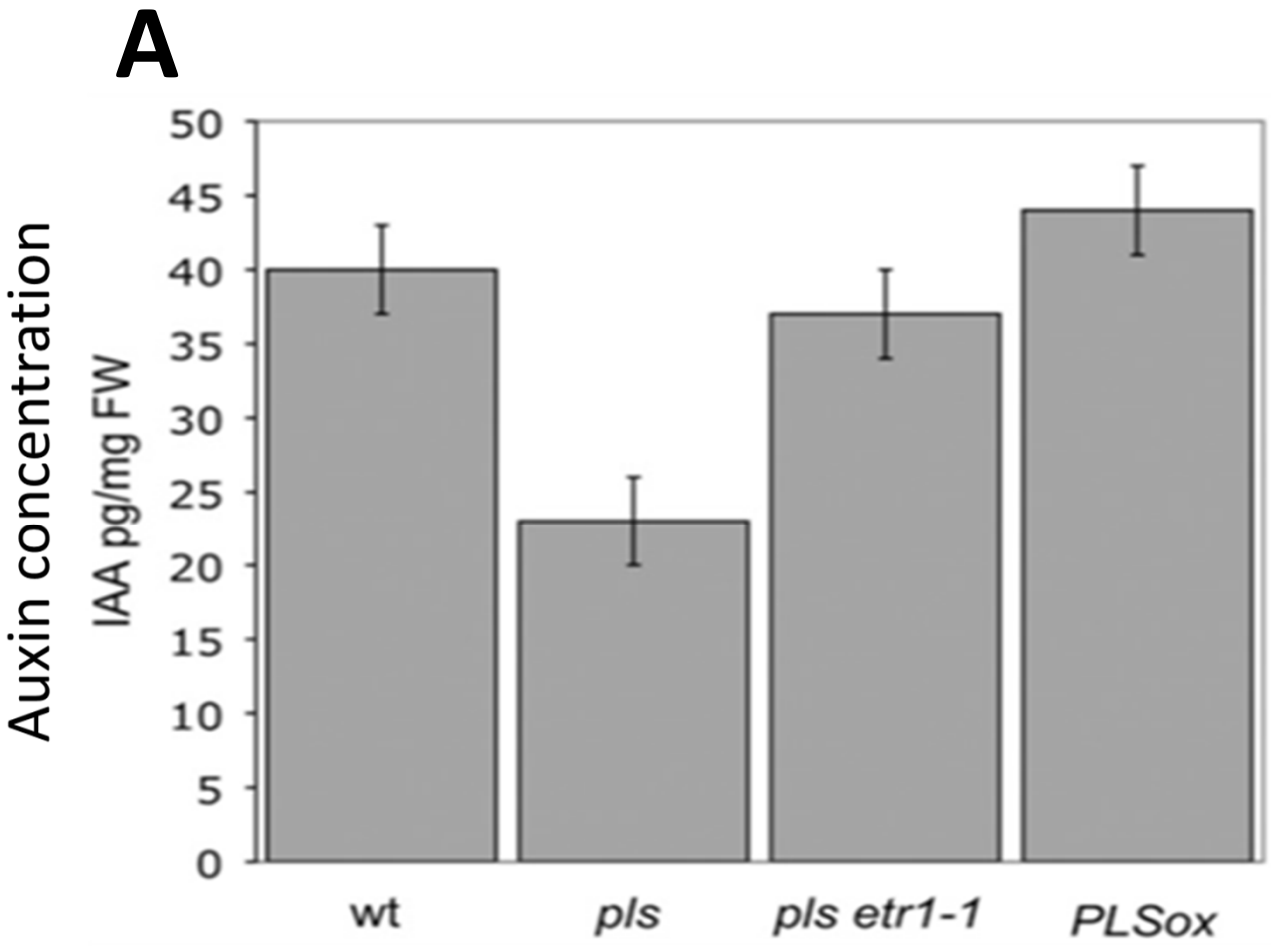
A
Auxin concentration
IAA pg/mg FW
50
45
40
35
30
25
20
15
10
5
0
wt
pls
pls etr1-1
PLSox

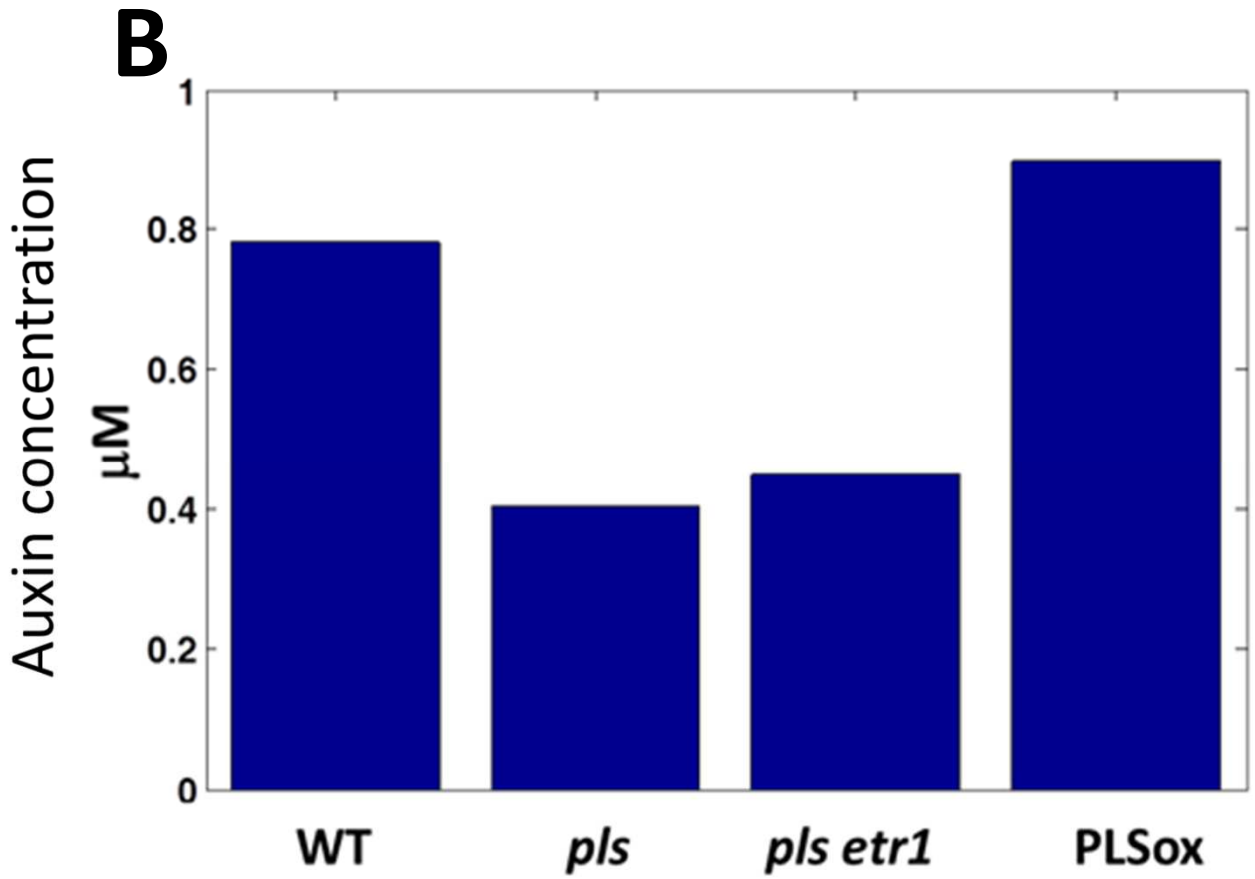
B
Auxin concentration
µM
1
0.8
0.6
0.4
0.2
0
WT
pls
pls etr1
PLSox